STABILIZATION, TRACKING AND DISTURBANCE REJECTION IN MULTIVARIABLE CONVOLUTION SYSTEMS

by

F. M. Callier and C. A. Desoer

Memorandum No. UCB/ERL M78/83

7 December 1978

ELECTRONICS RESEARCH LABORATORY

College of Engineering
University of California, Berkeley
94720

STABILIZATION, TRACKING AND DISTURBANCE REJECTION IN MULTIVARIABLE CONVOLUTION SYSTEMS

F. M. Callier, Department of Mathematics, Facultés Universitaires, Namur, Belgium

C. A. Desoer, Department of Electrical Engineering and Computer Sciences, and the Electronics Research Laboratory University of California, Berkeley, California 94720

ABSTRACT

This paper describes the algebra $\hat{\mathcal{B}}(\sigma_o)^{n_i x n_o}$ of transfer functions of multivariable distributed systems: this is a multivariable extension of the algebra $\hat{\mathcal{B}}(\sigma_o)$ of scalar transfer functions studied in previous papers [1], [2]: a detailed study of so called σ_o-right- and σ_o-left-representations is done: this is a generalization of coprime factorization theory for proper rational transfer matrices. The paper studies next feedback system stability of systems with transfer matrices with elements in $\mathcal{B}(\sigma_o)$: a closed-loop characteristic function is defined and its importance discussed. Forthcoming applications are preconditioned by studying a general problem which is encountered in compensator design: this generalizes to the distributed case a technique used by Youla et al. [3], [4]. Finally the problem of designing a feedback compensator for robust stabilization, tracking and disturbance rejection of a plant is defined and solved using the techniques of the paper.

Research sponsored by the National Science Foundation Grant ENG76-84522.

Some of the results contained in this memorandum have or will be announced at three conferences:

1) At the 761st American Mathematical Society Meeting in Charleston, S.C., Nov. 3, 1978 under the title, "Dynamic Output Stabilization of a Control System".

2) At the 17th IEEE Conference on Decision and Control, San Diego, Ca., Jan. 10, 1979, under the title, "Stabilization, Tracking and Disturbance Rejection in Linear Multivariable Distributed Systems".

3) At the 4th International Symposium on Mathematical Theory for Networks and Systems (MTNS 1979) Delft, Holland (July 3-6, 1979) under the title, "Matrix Fraction Representation Theory for Convolution Systems".

1. Introduction: Mathematical Definition and Facts; Perspective and Organization of the Paper

In previous papers [1], [2] we were concerned with the following mathematical definitions and facts concerning scalar systems. $(LTD)_+$ denotes the set of complex-valued Laplace transformable distributions with support on $\mathbb{R}_+$.

For $\sigma_o \in \mathbb{R}$, and element $f \in (LTD)_+$ is said to belong to $\mathcal{A}(\sigma_o)$ iff, for $t < 0, f(t) = 0$ and, for $t \geq 0, f(t) = f_a(t) + \sum_{i=0}^{\infty} f_i\, \delta(t-t_i)$, where i) $f_a(\cdot) \in L_{1,\sigma_o}(\mathbb{R}_+) := \{f;\ f : \mathbb{R}_+ \to \mathbb{C}, \int_0^\infty |f(t)| e^{-\sigma_o t} dt < \infty\}$, (ii) $t_o = 0$ and $t_i > 0$ for $i = 1,2,\ldots$, (iii) for all i, $f_i \in \mathbb{C}$ and $\delta(\cdot - t_i)$ is the Dirac delta distribution applied at t_i, (iv) $\sum_{i=1}^{\infty} |f_i| e^{-\sigma_o t_i} < \infty$. It is well known, [7, p. 248] that $\mathcal{A}(\sigma_o)$ is a commutative convolution Banach algebra with norm defined by

$$\|f\|_{\mathcal{A}(\sigma_o)} = \int_0^\infty |f_a(t)| e^{-\sigma_o t}\, dt + \sum_{i=0}^{\infty} |f_i| e^{-\sigma_o t_i} \tag{1.1}$$

and with unit element $\delta(\cdot)$, the Dirac delta distribution; moreover this algebra has no divisors of zero [5, Theorem 4.18.4;38]. Observe also that, for $\sigma_o = 0$, $\mathcal{A}(0)$ is identical to the algebra $\mathcal{A}$ described in [7, p. 246-247]; moreover, for $\sigma_o' \geq \sigma_o''$, $\mathcal{A}(\sigma_o') \supset \mathcal{A}(\sigma_o'')$.

For $\sigma_o \in \mathbb{R}$, an element $f \in (LTD)_+$ is said to belong to $\mathcal{A}_-(\sigma_o)$ iff there exists a $\sigma_1 \in \mathbb{R}$, $\sigma_1 < \sigma_o$, such that f belongs to $\mathcal{A}(\sigma_1)$. With the $\mathcal{A}(\sigma_o)$-norm (1.1), $\mathcal{A}_-(\sigma_o)$ is a normed convolution subalgebra of $\mathcal{A}(\sigma_o)$ with unit element δ and with no divisors of zero.

Let ^ denote Laplace transforms: i.e., $\hat{f}$ is the Laplace transform of f. $\hat{\mathcal{A}}(\sigma_o)$, $\hat{\mathcal{A}}_-(\sigma_o)$ denote commutative algebras with pointwise product of the $\hat{f}$'s where $f \in \mathcal{A}(\sigma_o)$, $\mathcal{A}_-(\sigma_o)$, respectively: their unit is 1 and they have no divisors of zero.

Let $\mathbb{C}_{\sigma_o+} := \{s \in \mathbb{C}; \mathrm{Re}s \geq \sigma_o\}$, $\mathring{\mathbb{C}}_{\sigma_o+} := \{s \in \mathbb{C}; \mathrm{Re}s > \sigma_o\}$ and $\mathring{\mathbb{C}}_{\sigma_o-} := \{s \in \mathbb{C}; \mathrm{Re}s < \sigma_o\}$.

The following are important properties of $\mathcal{A}(\sigma_o)$ and $\mathcal{A}_-(\sigma_o)$:

(i) f belongs to the convolution algebra $\mathcal{A}(\sigma_o)$, ($\mathcal{A}_-(\sigma_o)$resp.), iff $\hat{f}$ belongs to the algebra $\hat{\mathcal{A}}(\sigma_o)$, ($\hat{\mathcal{A}}_-(\sigma_o)$);

(ii) f is an invertible element of $\mathcal{A}(\sigma_o)$, ($\mathcal{A}_-(\sigma_o)$resp.) iff in both cases $\inf\{|\hat{f}(s)|; s \in \mathbb{C}_{\sigma_o+}\} > 0$;

(iiia) if $f \in \mathcal{A}(\sigma_o)$ then is $\hat{f}$ is bounded in $\mathbb{C}_{\sigma_o+}$, indeed $\sup\{|f(s)|; s \in \mathbb{C}_{\sigma_o+}\} \leq \|f\|_{\mathcal{A}(\sigma_o)}$, and f is analytic in $\mathring{\mathbb{C}}_{\sigma_o+}$;

(iiib) if $f \in \mathcal{A}_-(\sigma_o)$ then there exists a $\sigma_1 \in \mathbb{R}$, $\sigma_1 < \sigma_o$, such that $\hat{f}$ is bounded in $\mathbb{C}_{\sigma_1+}$ and analytic in $\mathring{\mathbb{C}}_{\sigma_1} \supset \mathbb{C}_{\sigma_o+}$: as a consequence $\hat{f}$ has a finite number of zeros in any <u>compact</u> set in $\mathbb{C}_{\sigma_o+}$;

(iv) if f and g belong to $\mathcal{A}_-(\sigma_o)$ then the pair (f,g) is σ_o-coprime iff there exist elements u,v in $\mathcal{A}_-(\sigma_o)$ such that $\hat{u}\hat{f} + \hat{v}\hat{g} \equiv 1$ or equivalently iff $\inf\{|(\hat{f}(s), \hat{g}(s))|; s \in \mathbb{C}_{\sigma_o+}\} > 0$ where $|(\cdot,\cdot)|$ is any norm in $\mathbb{C}^2$.

Let $\hat{\mathcal{A}}^\infty_-(\sigma_o) := \{\hat{f};\ \hat{f} \in \hat{\mathcal{A}}_-(\sigma_o)$ such that $\hat{f}$ is bounded away from zero at infinity in $\mathbb{C}_{\sigma_o+}\}$: $\hat{\mathcal{A}}^\infty_-(\sigma_o)$ is a multiplicative system, [6, p. 46], of $\hat{\mathcal{A}}(\sigma_o)$ and each element $\hat{f}$ of $\hat{\mathcal{A}}^\infty_-(\sigma_o)$ has a finite number of zeros in $\mathbb{C}_{\sigma_o+}$.

$\mathcal{B}(\sigma_o)$ is the convolution algebra corresponding to the pointwise product algebra $\hat{\mathcal{B}}(\sigma_o) = [\hat{\mathcal{A}}_-(\sigma_o)][\hat{\mathcal{A}}^\infty_-(\sigma_o)]^{-1}$ i.e. $\hat{\mathcal{B}}(\sigma_o)$ is the algebra of quotients $\hat{f} = \hat{n}/\hat{d}$ with $\hat{n} \in \hat{\mathcal{A}}_-(\sigma_o)$, $\hat{d} \in \hat{\mathcal{A}}^\infty_-(\sigma_o)$ and where, without loss of generality, the pair $(\hat{n},\hat{d})$ is σ_o-coprime, i.e., $|(\hat{n}(s),\hat{d}(s))| \neq 0$ for all $s \in \mathbb{C}_{\sigma_o+}$: a pair $(\hat{n},\hat{d})$ which satisfies these conditions is a σ_o-representation of $\hat{f} \in \hat{\mathcal{B}}(\sigma_o)$: there exists a bijection between the elements $\hat{f} \in \hat{\mathcal{B}}(\sigma_o)$ and the equivalence classes of σ_o-representations $\{(\hat{n},\hat{d})\}$ in which elements are equal modulo a multiplicative factor invertible in $\hat{\mathcal{A}}_-(\sigma_o)$.

Important properties of $\hat{\mathcal{B}}(\sigma_o)$ are:

i) if $\hat{f} \in \hat{\mathcal{B}}(\sigma_o)$ and $(\hat{n},\hat{d})$ is a σ_o-representation of $\hat{f}$ then:

a) there exists $\sigma_1 > \sigma_o$ such that $\hat{f}$ is meromorphic in $\mathring{\mathbb{C}}_{\sigma_1+} \supset \mathbb{C}_{\sigma_o+}$, is bounded at infinity in $\mathbb{C}_{\sigma_o+}$ and has a finite number of poles in $\mathbb{C}_{\sigma_o+}$;

b) $p \in \mathbb{C}_{\sigma_o+}$, (respectively $z \in \mathbb{C}_{\sigma_o+}$), is a pole, (zero), of $\hat{f}$ iff $\hat{d}(p) = 0$, $(\hat{n}(z) = 0)$;

(ii) $\hat{f}$ is an invertible element of $\hat{\mathcal{B}}(\sigma_o)$ iff $\hat{f}$ is bounded away from zero at infinity in $\mathbb{C}_{\sigma_o+}$.

Let $\mathbb{C}_p(s)$ denote the algebra of proper rational functions in s with complex coefficients and let for $\sigma_o \in \mathbb{R}$: $\mathcal{R}(\sigma_o) := \mathbb{C}_p(s) \cap \hat{\mathcal{A}}_-(\sigma_o)$ $= \{\hat{f};\ \hat{f} \in \mathbb{C}_p(s)$ such that $\hat{f}$ has no poles in $\mathbb{C}_{\sigma_o+}\}$, $\mathcal{R}^\infty(\sigma_o) := \{\hat{f}; f \in \mathcal{R}(\sigma_o)$ such that $\hat{f}$ is nonzero at infinity$\}$. $\mathcal{R}^\infty(\sigma_o)$ is a multiplicative system [6,p.46] of the algebra $\mathcal{R}(\sigma_o)$ and $\mathbb{C}_p(s) = [\mathcal{R}(\sigma_o)][\mathcal{R}^\infty(\sigma_o)]^{-1}$ i.e. $\mathbb{C}_p(s)$ is an algebra of quotients $\hat{f} = \hat{n}/\hat{d}$ with $\hat{n} \in \mathcal{R}(\sigma_o)$ and $\hat{d} \in \mathcal{R}^\infty(\sigma_o)$.

It follows that $\hat{\mathcal{A}}_-(\sigma_o)$, $\hat{\mathcal{A}}_-^\infty(\sigma_o)$, $\hat{\mathcal{B}}(\sigma_o) = [\hat{\mathcal{A}}_-(\sigma_o)][\hat{\mathcal{A}}_-^\infty(\sigma_o)]^{-1}$ are extensions of $\mathcal{R}(\sigma_o)$, $\mathcal{R}^\infty(\sigma_o)$, $\mathbb{C}_p(s) = [\mathcal{R}(\sigma_o)][\mathcal{R}^\infty(\sigma_o)]^{-1}$ for representing transfer functions of distributed linear time invariant systems.

Note also that if $\hat{f} \in \hat{\mathcal{A}}_-^\infty(\sigma_o)$ then $\hat{f} = \hat{f}_1\hat{f}_2$ where $\hat{f}_1$ is an invertible element of $\hat{\mathcal{A}}_-(\sigma_o)$ and $\hat{f}_2$ belongs to $\mathcal{R}^\infty(\sigma_o)$: "$\hat{\mathcal{A}}_-^\infty(\sigma_o)$ and $\mathcal{R}^\infty(\sigma_o)$ are essentially the same": in particular $\hat{\mathcal{B}}(\sigma_o) = [\hat{\mathcal{A}}_-(\sigma_o)][\hat{\mathcal{A}}_-^\infty(\sigma_o)]^{-1}$ $= [\hat{\mathcal{A}}_-(\sigma_o)][\mathcal{R}^\infty(\sigma_o)]^{-1}$.

We shall now be concerned with transfer matrices of multivariable distributed systems i.e., with matrices with elements in $\widehat{(\mathrm{LTD})}_+$, $\hat{\mathcal{A}}(\sigma_o)$, $\hat{\mathcal{A}}_-(\sigma_o)$, $\hat{\mathcal{B}}(\sigma_o)$. $\widehat{(\mathrm{LTD})}_+^{nxn}$, $\hat{\mathcal{A}}_-(\sigma_o)^{nxn}$, $\hat{\mathcal{B}}(\sigma_o)^{nxn}$ are all algebras with a non-commutative pointwise product and unit I_n. $\hat{F} \in \hat{\mathcal{A}}(\sigma_o)^{nxn}$, ($\hat{\mathcal{A}}_-(\sigma_o)^{nxn}$ resp.), is invertible in $\hat{\mathcal{A}}(\sigma_o)^{nxn}$, ($\hat{\mathcal{A}}_-(\sigma_o)^{nxn}$ resp.), iff in both cases $\inf\{|\det \hat{F}(s)|; s \in \mathbb{C}_{\sigma_o+}\} > 0$. $\hat{F} \in \hat{\mathcal{B}}(\sigma_o)^{nxn}$ is invertible in $\hat{\mathcal{B}}(\sigma_o)^{nxn}$ iff $\det \hat{F}$ is bounded away from zero at infinity in $\mathbb{C}_{\sigma_o+}$.

It is the purpose of this paper to establish a procedure which for a given plant $\hat{P} \in \hat{\mathcal{B}}(\sigma_o)^{n_o x n_i}$, (see Fig. 3.1), finds an output feedback compensator $\hat{C} \in \hat{\mathcal{B}}(\sigma_o)^{n_i x n_o}$ such that the resulting feedback system S,

a) is $\mathcal{A}$-stable while having a prescribed set of closed-loop poles in $\mathbb{C}_{\sigma_o+}$,

b) tracks asymptotically a class of reference signals and

c) rejects asymptotically a class of disturbance signals.

This task is realized as follows: in section 2 we establish for matrices with elements in $\hat{\mathcal{B}}(\sigma_o)$ a <u>representation theory in terms of matrix fractions</u>: the results on $\hat{\mathcal{B}}(\sigma_o)$ of [1], [2] are hereby extended to multivariable systems; in section 3 we study <u>feedback system stability</u> of systems with loop matrices with elements in $\hat{\mathcal{B}}(\sigma_o)$: we adopt hereby results of [18], [32] and define a closed loop system characteristic function; in section 4 we study a <u>preliminary algebraic problem for compensator design</u> which extends to matrices with elements in $\hat{\mathcal{A}}_-(\sigma_o)$ a technique used by Youla et al. [3], [4] involving polynomials or polynomial matrices; in section 5 we search for and find a <u>compensator design for stabilization, tracking and disturbance rejection</u>, using a set up inspired by [3]-[4] and [31]-[34]: we handle here a plant with transfer matrix with elements in $\hat{\mathcal{B}}(\sigma_o)$.

The paper is therefore organized as follows: 1. the present introduction; 2. matrix fraction representation theory; 3. feedback system stability; 4. preliminary algebraic problem for compensator design; 5. compensator design for stabilization, tracking and disturbance rejection.

Before starting we shall mention the following convention in order to avoid the multiple use of the superscript ^ to indicate Laplace transformed quantities: quantities represented by script letters are Laplace transformed

unless specifically mentioned. We need also the following definitions.

Definition 1.1r. Let $\mathcal{N} \in \hat{\mathcal{A}}_-(\sigma_o)^{m\times n}$ and $\mathcal{D} \in \hat{\mathcal{A}}_-(\sigma_o)^{n\times n}$. We say that the pair $(\mathcal{N},\mathcal{D})$ is σ_o-right coprime (σ_o-r.c.) iff there exist elements $\mathcal{U} \in \hat{\mathcal{A}}_-(\sigma_o)^{n\times m}$ and $\mathcal{V} \in \hat{\mathcal{A}}_-(\sigma_o)^{n\times n}$ such that $\mathcal{U}\mathcal{N}+\mathcal{V}\mathcal{D} = I_n$.

Definition 1.1ℓ. Let $\mathcal{D} \in \hat{\mathcal{A}}_-(\sigma_o)^{n\times n}$ and $\mathcal{N} \in \hat{\mathcal{A}}_-(\sigma_o)^{n\times m}$. We say that the pair $(\mathcal{D},\mathcal{N})$ is σ_o-left coprime (σ_o-ℓ.c.) iff there exist elements $\mathcal{U} \in \hat{\mathcal{A}}_-(\sigma_o)^{m\times n}$ and $\mathcal{V} \in \hat{\mathcal{A}}_-(\sigma_o)^{n\times n}$ such that $\mathcal{N}\mathcal{U}+\mathcal{D}\mathcal{V} = I_n$.

2. Matrix Fraction Representation Theory.

Definition 2.1r. Let $F \in (LTD)_+^{n_o\times n_i}$; the pair $(\mathcal{N}_r,\mathcal{D}_r)$ is said to be a σ_o-right representation (σ_o-r.r.) of $\hat{F}$ if $\mathcal{N}_r \in \hat{\mathcal{A}}_-(\sigma_o)^{n_o\times n_i}$ and $\mathcal{D}_r \in \hat{\mathcal{A}}_-(\sigma_o)^{n_i\times n_i}$ such that

(i) $\hat{F} = \mathcal{N}_r \mathcal{D}_r^{-1}$

(ii) the pair $(\mathcal{N}_r,\mathcal{D}_r)$ is σ_o-right coprime (σ_o-r.c.), i.e., there exist elements $\mathcal{U}_r \in \hat{\mathcal{A}}_-(\sigma_o)^{n_i\times n_o}$ and $\mathcal{V}_r \in \hat{\mathcal{A}}_-(\sigma_o)^{n_i\times n_i}$ such that

$$\mathcal{U}_r\mathcal{N}_r + \mathcal{V}_r\mathcal{D}_r = I_{n_i}$$

(iii) $\det \mathcal{D}_r \in \hat{\mathcal{A}}_-^{\infty}(\sigma_o)$. ¤

A σ_o-left representation (σ_o-ℓ.r.) of $\hat{F}$, $\hat{F} \in (LTD)_+^{n_o\times n_i}$, is by definition a pair $(\mathcal{D}_\ell, \mathcal{N}_\ell)$ which is similarly defined as $(\mathcal{N}_r, \mathcal{D}_r)$ in definition 2.1r: change subscripts r for ℓ, interchange the order of the factors above, choose appropriate dimensions with $\mathcal{D}_\ell$ and $\mathcal{V}_\ell$ of dimension $n_o \times n_o$: refer to this as Definition 2.1ℓ.

Remark R2.1 Observe that if $n_o = n_i = 1$ then σ_o-representations (left and right) reduce to a σ_o - representation of $\hat{F} = \hat{f}$, [1], [2].

Lemma 2.1 If $\hat{F} \in \hat{\mathcal{B}}(\sigma_o)^{n_o\times n_i}$, then

$$\hat{F} = \hat{R} + \hat{G} \tag{2.1}$$

where

(i) $\hat{G} \in \hat{\mathcal{A}}_-(\sigma_o)^{n_o x n_i}$

(ii) $\hat{R}$ is a strictly proper element of $\mathbb{C}(s)^{n_o x n_i}$ which is zero if and only if $\hat{F} \in \hat{\mathcal{A}}_-(\sigma_o)^{n_o x n_i}$,

(iii) if $\hat{F} \notin \hat{\mathcal{A}}_-(\sigma_o)^{n_o x n_i}$ then $\hat{R}$ is the sum of the principal parts of the Laurent expansions of $\hat{F}$ at its poles in $\mathbb{C}_{\sigma_o+}$, where in particular $\hat{F}$ has an m-th order pole at $p \in \mathbb{C}_{\sigma_o+}$ if and only if $\hat{R}$ has an m-th order pole at $p \in \mathbb{C}_{\sigma_o+}$.

<u>Proof</u>: $\hat{F} = [\hat{f}_{ij}]_{i\in\bar{n}_o, j\in\bar{n}_i}$ where for all $i = 1,2,\ldots,n_o$, for all $j = 1,2,\ldots,n_i$, $\hat{f}_{ij} \in \hat{\mathcal{B}}(\sigma_o)$, i.e. according to theorem 3.3 of [1], $\hat{f}_{ij} = \hat{r}_{ij} + \hat{g}_{ij}$ where (i) $\hat{g}_{ij} \in \hat{\mathcal{A}}_-(\sigma_o)$, (ii) $\hat{r}_{ij}$ is a strictly proper rational function which is zero iff $\hat{f}_{ij} \in \hat{\mathcal{A}}_-(\sigma_o)$, (iii) if $\hat{f}_{ij} \notin \hat{\mathcal{A}}_-(\sigma_o)$ then $\hat{r}_{ij}$ is the sum of the principal parts of the Laurent expansions of $\hat{f}$ at its poles in $\mathbb{C}_{\sigma_o+}$. ¤

<u>Remark R.2.2</u> The importance of the sum decomposition of Lemma 1 lies in the fact that it permits to find a σ_o-ℓ.r. or a σ_o-r.r. for $\hat{F} \in \hat{\mathcal{B}}(\sigma_o)^{n_o x n_i}$ by finding first such a representation for "its rational principal part" $\hat{R}$. Now observe that, with [2],

$$\mathcal{R}(\sigma_o) := \{\hat{f} \in \mathbb{C}_p(s);\ f \text{ has no poles in } \mathbb{C}_{\sigma_o+}\} = \mathbb{C}_p(s) \cap \hat{\mathcal{A}}_-(\sigma_o) \tag{2.2}$$

$$\mathcal{R}^\infty(\sigma_o) := \{\hat{f} \in \mathcal{R}(\sigma_o);\ f \text{ is non-zero at infinity}\} \subset \hat{\mathcal{A}}_-^\infty(\sigma_o) \tag{2.3}$$

$\mathbb{C}_p(s)$ is a quotient ring $[\mathcal{R}(\sigma_o)][\mathcal{R}^\infty(\sigma_o)]^{-1}$ of $\mathcal{R}(\sigma_o)$ with respect to its multiplicative system $\mathcal{R}^\infty(\sigma_o)$, [2], i.e. if $\hat{f} \in \mathbb{C}_p(s)$ then $\hat{f}$ can be written as $f = \hat{n}_f/\hat{d}_f$ with $\hat{n}_f \in \mathcal{R}(\sigma_o)$, $\hat{d}_f \in \mathcal{R}^\infty(\sigma_o)$ by using a scaling polynomial e.g. $\hat{f}(s) = (s-1)/(s-2)^2 = \hat{n}_f/\hat{d}_f$ with $\hat{n}_f(s) = (s-1)/(s-\sigma_o+1)^2$ and $\hat{d}_f(s) = (s-2)^2/(s-\sigma_o+1)^2$: observe that in this way one obtains a σ_o-representation $(\hat{n}_f,\hat{d}_f)$ by making $(\hat{n}_f,\hat{d}_f)$ σ_o-coprime, [1], [2], cancelling

common factors $(s-z)/(s-a)$ with $z \in \mathbb{C}_{\sigma_o+}$, $a \in \mathring{\mathbb{C}}_{\sigma_o-}$: here a pair $(\hat{n}_f, \hat{d}_f)$ with $\hat{n}_f \in \mathcal{R}(\sigma_o)$, $\hat{d}_f \in \mathcal{R}^{\infty}(\sigma_o)$ and $(\hat{n}_f, \hat{d}_f)$ σ_o-coprime is a σ_o-representation. Observe also that $\mathcal{R}(\sigma_o)$ is a Euclidean ring, [9], [10], see also Appendix I. It follows that every matrix with elements in $\mathcal{R}(\sigma_o)$, say $\mathcal{M} \in \mathcal{R}(\sigma_o)^{n_o x n_i}$, has a Hermite form [8, p. 32] obtainable through elementary operations [8, p. 34, Th. 22.4]. Hence the same must be true for triangularization. Also every compatible pair of matrices $\mathcal{N}$ and $\mathcal{D}$ with elements in $\mathcal{R}(\sigma_o)$ has a greatest common right divisor (g.c.r.d.), $\mathcal{R}$, [8, p. 35], expressible in the form $\mathcal{U}\mathcal{N}+\mathcal{V}\mathcal{D}=\mathcal{R}$ where $\mathcal{U}$ and $\mathcal{V}$ are matrices with elements in $\mathcal{R}(\sigma_o)$; furthermore if $\mathcal{R}$ is invertible in $\mathcal{R}(\sigma_o)^{nxn}$ we say that $\mathcal{N}$ and $\mathcal{D}$ are right coprime w.r.t. $\mathcal{R}(\sigma_o)$; note that the matrices $\mathcal{U}, \mathcal{V}, \mathcal{R}$ can be obtained through elementary operations [8, Chapter III, pp. 33-36], a variant of this procedure being described in [11, pp. 8-9] and [7, p. 65]; it is also easily seen that $\mathcal{N}$ and $\mathcal{D}$ are right coprime w.r.t. $\mathcal{R}(\sigma_o)$ iff the matrix $\begin{bmatrix} \mathcal{D} \\ \mathcal{N} \end{bmatrix}$ has full rank for all s in $\mathbb{C}_{\sigma_o+}$ and at infinity; moreover if $\mathcal{N}$ and $\mathcal{D}$ are right coprime w.r.t. $\mathcal{R}(\sigma_o)$ then they are σ_o-right coprime as in Definition 1.1r. Similar Facts hold for a greatest common left divisor (g.c.ℓ.d.) and left coprimeness w.r.t. $\mathcal{R}(\sigma_o)$. The above suggests that it should be relatively easy to find a <u>rational</u> σ_o-r.r. of the principal rational part $\hat{R}$ of $\hat{F}$ in (2.1), once we can express $\hat{R}$ as $\hat{R} = \mathcal{N}_r \mathcal{D}_r^{-1}$ with $\mathcal{N}_r \in \mathcal{R}(\sigma_o)^{n_o x n_i}$ $\mathcal{D}_r \in \mathcal{R}(\sigma_o)^{n_i x n_i}$, $\det[\mathcal{D}_r] \in \mathcal{R}^{\infty}(\sigma_o)$. These suggestions are exploited in the proof of the following theorem.

<u>Theorem 2.1</u> If $\hat{F} \in \hat{\mathcal{B}}(\sigma_o)^{n_o x n_i}$, then $\hat{F}$ admits a σ_o-r.r. and a σ_o-ℓ.r.. More precisely, there exist matrices with elements in $\hat{\mathcal{A}}_-(\sigma_o)$, namely

$$\mathcal{N}_r, \mathcal{D}_r, \mathcal{U}_r, \mathcal{V}_r$$

$$\mathcal{N}_\ell, \mathcal{D}_\ell, \mathcal{U}_\ell, \mathcal{V}_\ell$$

such that

(i) $(\mathcal{N}_r, \mathcal{D}_r)$ is a σ_o-r.r. of $\hat{F}$;

(ii) $(\mathcal{D}_\ell, \mathcal{N}_\ell)$ is a σ_o-ℓ.r. of $\hat{F}$;

(iii)
$$\begin{array}{c} \\ n_i \\ n_o \end{array}\begin{array}{c} \begin{array}{cc} n_i & n_o \end{array} \\ \left[\begin{array}{c|c} \mathcal{V}_r & \mathcal{U}_r \\ \hline -\mathcal{N}_\ell & \mathcal{D}_\ell \end{array}\right] \end{array} \begin{array}{c} \begin{array}{cc} n_i & n_o \end{array} \\ \left[\begin{array}{c|c} \mathcal{D}_r & -\mathcal{U}_\ell \\ \hline \mathcal{N}_r & \mathcal{V}_\ell \end{array}\right] \end{array} = \left[\begin{array}{c|c} I_{n_i} & 0 \\ \hline 0 & I_{n_o} \end{array}\right] \tag{2.3}$$

where if we call the matrices on the left hand side of (2.3), $\mathcal{W}$ and $\mathcal{W}^{-1}$ respectively, then obviously $\mathcal{W}$ is an invertible element ("unit") of $\hat{\mathcal{A}}_-(\sigma_o)^{(n_i+n_o)x(n_i+n_o)}$ and without loss of generality

$$\det \mathcal{W} = \det \mathcal{W}^{-1} \equiv 1.$$

<u>Proof</u>: Without loss of generality we assume $\hat{F} \notin \hat{\mathcal{A}}_-(\sigma_o)^{n_o x n_i}$; otherwise choose

$$\mathcal{N}_r = \hat{F}\,;\ \mathcal{D}_r = I_{n_i}\,;\ \mathcal{U}_r = 0\,;\ \mathcal{V}_r = I_{n_i}$$
$$\mathcal{N}_\ell = \hat{F}\,;\ \mathcal{D}_\ell = I_{n_o}\,;\ \mathcal{U}_\ell = 0\,;\ \mathcal{V}_\ell = I_{n_o}\,.$$

Use now lemma 1 and recall that each element $\hat{r}_{ij}$ of its rational principal part $\hat{R}$ admits according to remark R.2.2 a rational σ_o-admissible representation $(n_{r_{ij}}, d_{r_{ij}})$ with $n_{r_{ij}} \in \mathcal{R}(\sigma_o)$ and $d_{r_{ij}} \in \mathcal{R}^\infty(\sigma_o)$. Recall also the structural properties discussed in Remark R.2.2 and apply the following procedure:

<u>Algorithm 2.1</u> Given is $\hat{F}$, $\hat{G}$ and $\hat{R}$ as in Lemma 2.1.

<u>Step 1</u>. Find $\tilde{\mathcal{N}}_r \in \mathcal{R}(\sigma_o)^{n_o x n_i}$ and $\tilde{\mathcal{D}}_r \in \mathcal{R}(\sigma_o)^{n_i x n_i}$ with $\det \tilde{\mathcal{D}}_r \in \mathcal{R}^\infty(\sigma_o)$ and such that

$$\hat{R} = \mathcal{N}_r \tilde{\mathcal{D}}_r^{-1} \tag{2.4}$$

e.g. by setting $\tilde{\mathcal{D}}_r = \mathrm{diag}[\tilde{d}_j]_{j=1}^{n_i}$ where the $\tilde{d}_j$ are column least common denominators of $\hat{R}$ w.r.t. $\mathcal{R}(\sigma_o)$.

Step 2. Consider the $(n_o+n_i) \times n_i$ full rank† matrix

$$\tilde{\mathcal{M}} := \begin{array}{c} \\ n_i \\ n_o \end{array} \begin{array}{c} n_i \\ \left[\begin{array}{c} \tilde{\mathcal{D}}_r \\ \hline \tilde{\mathcal{N}}_r \end{array}\right] \end{array} \in \mathcal{R}(\sigma_o)^{(n_i+n_o)\times n_i} \tag{2.5}$$

By performing elementary row operations based on the Euclidean algorithm performed in the ring $\mathcal{R}(\sigma_o)$, e.g. [8, pp. 33-36], [11, p. 8-9], [7, p. 65], upper triangularize $\tilde{\mathcal{M}}$, i.e. find an $(n_i+n_o) \times (n_i+n_o)$ matrix $\bar{\mathcal{W}}$ invertible in $\mathcal{R}(\sigma_o)^{(n_i+n_o)\times(n_i+n_o)}$ and a full rank upper triangular matrix $\mathcal{R} \in \mathcal{R}(\sigma_o)^{n_i \times n_i}$ such that

$$\bar{\mathcal{W}}\tilde{\mathcal{M}} = \begin{array}{c} n_i \\ n_o \end{array} \left[\begin{array}{c} \mathcal{R} \\ \hline 0 \end{array}\right] \tag{2.6}$$

and where scaling (multiplying rows by "units" in $\mathcal{R}(\sigma_o)$) can be used to get

$\det \bar{\mathcal{W}} \equiv 1$.

Step 3. Partition $\bar{\mathcal{W}}$ and $\bar{\mathcal{W}}^{-1}$ into

$$\bar{\mathcal{W}} = \begin{array}{c} \\ n_i \\ n_o \end{array} \begin{array}{c} \begin{array}{cc} n_i & n_o \end{array} \\ \left[\begin{array}{c|c} \bar{\mathcal{V}}_r & \bar{\mathcal{U}}_r \\ \hline -\bar{\mathcal{N}}_\ell & \bar{\mathcal{D}}_\ell \end{array}\right] \end{array} ; \bar{\mathcal{W}}^{-1} = \begin{array}{c} \\ n_i \\ n_o \end{array} \begin{array}{c} \begin{array}{cc} n_i & n_o \end{array} \\ \left[\begin{array}{c|c} \bar{\mathcal{D}}_r & -\bar{\mathcal{U}}_\ell \\ \hline \bar{\mathcal{N}}_r & \bar{\mathcal{V}}_\ell \end{array}\right] \end{array} \tag{2.7}$$

Comment: the eight matrices with elements in $\mathcal{R}(\sigma_o) \subset \hat{\mathcal{A}}_-(\sigma_o)$, namely

$\bar{\mathcal{N}}_r, \bar{\mathcal{D}}_r, \bar{\mathcal{U}}_r, \bar{\mathcal{V}}_r$

$\bar{\mathcal{N}}_\ell, \bar{\mathcal{D}}_\ell, \bar{\mathcal{U}}_\ell, \bar{\mathcal{V}}_\ell$

satisfy the conclusions of Theorem 1 provided $\hat{F}$ has been replaced by $\hat{R}$

Step 4. Recalling (2.1), define

---

† $\tilde{\mathcal{M}} \in \mathcal{R}(\sigma_o)^{(n_i+n_o)\times n_i}$ is full rank because by assumption, $\det \tilde{\mathcal{D}}_r \in \mathcal{R}^\infty(\sigma_o)$, hence $\det \tilde{\mathcal{D}}_r$ is not the zero-element of $\mathcal{R}(\sigma_o)$.

$$\mathcal{D}_r := \bar{\mathcal{D}}_r \qquad \mathcal{D}_\ell := \bar{\mathcal{D}}_\ell$$

$$\mathcal{N}_r := \bar{\mathcal{N}}_r + \hat{G}\bar{\mathcal{D}}_r \qquad \mathcal{N}_\ell := \bar{\mathcal{N}}_\ell + \bar{\mathcal{D}}_\ell\hat{G}$$

$$\mathcal{V}_r := \bar{\mathcal{V}}_r - \bar{\mathcal{U}}_r\hat{G} \qquad \mathcal{V}_\ell := \bar{\mathcal{V}}_\ell - \hat{G}\bar{\mathcal{U}}_\ell \tag{2.8}$$

$$\mathcal{U}_r := \bar{\mathcal{U}}_r \qquad \mathcal{U}_\ell := \bar{\mathcal{U}}_\ell$$

and stop.

<u>Comment</u>: the eight matrices with elements in $\hat{\mathcal{A}}_-(\sigma_o)$, namely

$$\mathcal{N}_r, \mathcal{D}_r, \mathcal{U}_r, \mathcal{V}_r$$

$$\mathcal{N}_\ell, \mathcal{D}_\ell, \mathcal{U}_\ell, \mathcal{V}_\ell$$

satisfy the conclusions of Theorem 1. ¤

We shall now show that Algorithm 2.1 works.

<u>Step 1</u>. Since all elements $\hat{r}_{ij}$ of $\hat{R}$ in (2.1) are elements of $\mathbb{C}_p(s)$ and have poles only in $\mathbb{C}_{\sigma_o+}$, they admit a rational σ_o-admissible representation $(n_{r_{ij}}, d_{r_{ij}})$ with $n_{r_{ij}} \in \mathcal{R}(\sigma_o)$ and $d_{r_{ij}} \in \mathcal{R}^\infty(\sigma_o)$ with $n_{r_{ij}}$ and $d_{r_{ij}}$ coprime w.r.t. $\mathcal{R}(\sigma_o)$, and it is possible to construct a least common multiple $\tilde{d}_j \in \mathcal{R}^\infty(\sigma_o)$ of all denominators $d_{ij} \in \mathcal{R}^\infty(\sigma_o)$ of column j, [12, Ch. IV, §10]. Hence setting $\hat{r}_{ij} = \tilde{n}_{ij}/\tilde{d}_j$ we get that $\mathcal{N}_r = [\tilde{n}_{ij}]$ and $\tilde{\mathcal{D}}_r = \mathrm{diag}[d_j]_{j=1}^{n_i}$ satisfy the conditions of step 1.

<u>Step 2</u>. Since $\tilde{\mathcal{M}}$ is full rank because by assumption det $\tilde{\mathcal{D}}_r \in \mathcal{R}^\infty(\sigma_o)$, hence is not the zero element of $\mathcal{R}(\sigma_o)$, step 2 is self explanatory.

<u>Step 3</u>. The comment of step 3 is true as follows. Observe that all matrices in (2.5)-(2.7) have elements in $\mathcal{R}(\sigma_o) \subset \hat{\mathcal{A}}_-(\sigma_o)$ with det $\tilde{\mathcal{D}}_r$ and det $\bar{\mathcal{R}} \in \mathcal{R}^\infty(\sigma_o)$; moreover from $\mathcal{M} = \bar{\mathcal{W}}^{-1}\begin{bmatrix}\mathcal{R}\\ \hline 0\end{bmatrix}$

$$\tilde{\mathcal{D}}_r = \bar{\mathcal{D}}_r\bar{\mathcal{R}} \qquad \tilde{\mathcal{N}}_r = \bar{\mathcal{N}}_r\bar{\mathcal{R}}$$

hence

$$\hat{R} = \tilde{\mathcal{N}}_r\tilde{\mathcal{D}}_r^{-1} = \bar{\mathcal{N}}_r\bar{\mathcal{D}}_r^{-1} .$$

From $\bar{\mathcal{W}}\bar{\mathcal{W}}^{-1} = I$ we have

$$\bar{\mathcal{V}}_r\bar{\mathcal{D}}_r + \bar{\mathcal{U}}_r\bar{\mathcal{N}}_r = I_{n_i}.$$

Hence $(\bar{\mathcal{N}}_r,\bar{\mathcal{D}}_r)$ is a σ_o-r.r. of $\hat{R}$, with $\bar{\mathcal{R}}$ a g.c.r.d. of $\tilde{\mathcal{N}}_r$ and $\tilde{\mathcal{D}}_r$, [8, p. 35]. Observe that from $\bar{\mathcal{W}}\bar{\mathcal{W}}^{-1} = I$, we get also

$$\hat{R} = \bar{\mathcal{N}}_r\bar{\mathcal{D}}_r^{-1} = \bar{\mathcal{D}}_\ell^{-1}\bar{\mathcal{N}}_\ell$$

$$\bar{\mathcal{N}}_\ell\bar{\mathcal{U}}_\ell + \bar{\mathcal{D}}_\ell\bar{\mathcal{V}}_\ell = I_{n_o}.$$

Furthermore since by construction $\bar{\mathcal{W}}$ is an invertible element of $\mathcal{R}(\sigma_o)^{(n_i+n_o)x(n_i+n_o)}$, det $\bar{\mathcal{W}}(s)$ tends to a nonzero complex constant as $|s| \to \infty$. From the partition of $\bar{\mathcal{W}}$, (2.7), then $[-\bar{\mathcal{N}}_\ell \vdots \bar{\mathcal{D}}_\ell] = \bar{\mathcal{D}}_\ell[\hat{R} \vdots I_{n_o}]$ is full rank at infinity; hence det $\bar{\mathcal{D}}_\ell \in \mathcal{R}(\sigma_o)$ tends to a nonzero constant at infinity. Thus $(\bar{\mathcal{D}}_\ell,\bar{\mathcal{N}}_\ell)$ is a σ_o-ℓ.r. of $\hat{R}$.

<u>Step 4</u>. Checking the comment of step 4 follows easily using (2.8) and simple computations, in particular

$$\mathcal{W} = \begin{array}{c} \\ n_i \\ n_o \end{array}\!\!\begin{array}{c} \begin{array}{cc} n_i & n_o \end{array} \\ \left[\begin{array}{c:c} \bar{\mathcal{V}}_r & \bar{\mathcal{U}}_r \\ \hdashline -\bar{\mathcal{N}}_\ell & \bar{\mathcal{D}}_\ell \end{array}\right] \end{array} \begin{array}{c} \begin{array}{cc} n_i & n_o \end{array} \\ \left[\begin{array}{c:c} I_{n_i} & 0 \\ \hdashline -\hat{G} & I_{n_o} \end{array}\right] \end{array} = \bar{\mathcal{W}} \left[\begin{array}{c:c} I_{n_i} & 0 \\ \hdashline \hat{G} & I_{n_o} \end{array}\right]$$

$$\begin{array}{c} n_i \\ n_o \end{array}\!\!\begin{array}{c} \begin{array}{cc} n_i & n_o \end{array} \\ \left[\begin{array}{c:c} I_{n_i} & 0 \\ \hdashline \hat{G} & I_{n_o} \end{array}\right] \end{array} \begin{array}{c} \begin{array}{cc} n_i & n_o \end{array} \\ \left[\begin{array}{c:c} \bar{\mathcal{D}}_r & -\bar{\mathcal{U}}_\ell \\ \hdashline \bar{\mathcal{N}}_r & \bar{\mathcal{V}}_\ell \end{array}\right] \end{array} = \left[\begin{array}{c:c} I_{n_i} & 0 \\ \hdashline \hat{G} & I_{n_o} \end{array}\right] \bar{\mathcal{W}}^{-1} = \mathcal{W}^1. \qquad \square$$

<u>Remark R2.3</u> Observe that in algorithm 2.1, used in the proof of Theorem 2.1, we actually obtain that

$$\mathcal{D}_r \in \mathcal{R}(\sigma_o)^{n_i x n_i} \qquad \mathcal{D}_\ell \in \mathcal{R}(\sigma_o)^{n_o x n_i}$$

$$\det \mathcal{D}_r \in \mathcal{R}^\infty(\sigma_o) \qquad \det \mathcal{D}_\ell \in \mathcal{R}^\infty(\sigma_o)$$

i.e. the "denominators" of the σ_o-r.r. $(\mathcal{D}_r,\mathcal{N}_r)$ and the σ_o-ℓ.r. $(\mathcal{N}_\ell,\mathcal{D}_\ell)$ are rational! The uniqueness of the representations will be treated below. $\square$

We have also

Corollary 2.1. Let $F \in (LTD)_+^{n_o x n_i}$, then

$$\hat{F} \in \hat{\mathcal{B}}(\sigma_o)^{n_o x n_i}$$

if and only if

$\hat{F}$ admits a σ_o-r.r. $(\mathcal{N}_r, \mathcal{D}_r)$ or a σ_o-ℓ.r. $(\mathcal{D}_\ell, \mathcal{N}_\ell)$.

Proof: Only if: this is an immediate consequence of Theorem 2.1.

If: Observe that $\hat{F} = [\hat{f}_{ij}]_{i \in \bar{n}_o, j \in \bar{n}_i}$. Moreover since $\hat{F} = \mathcal{N}_r \mathcal{D}_r^{-1}$ it follows by Cramer's rule that for all i and j

$$\hat{f}_{ij} = [\mathcal{N}_r]_{i.} [\mathrm{Adj}\, \mathcal{D}_r]_{.j} / \det \mathcal{D}_r$$

where from the closure properties of $\hat{\mathcal{A}}_-(\sigma_o)$, [1], $[\mathcal{N}_r]_{i.} [\mathrm{Adj}\, \mathcal{D}_r]_{.j}$ belongs to $\hat{\mathcal{A}}_-(\sigma_o)$ and by definition $\det \mathcal{D}_r$ belongs to $\hat{\mathcal{A}}_-^\infty(\sigma_o)$. Hence for all i and j, $\hat{f}_{ij}$ belongs to $\hat{\mathcal{B}}(\sigma_o) = [\hat{\mathcal{A}}_-(\sigma_o)][\hat{\mathcal{A}}_-^\infty(\sigma_o)]^{-1}$, [2]. ¤

Remark R2.4 From Corollary 2.1 it is obvious that we can identify

$$\hat{\mathcal{B}}(\sigma_o)^{n_o x n_i} = \{\hat{F} : F \in (LTD)_+^{n_o x n_i} \text{ and } \hat{F} \text{ admits a } \sigma_o\text{-r.r. or a } \sigma_o\text{-}\ell\text{.r.}\} \tag{2.9}$$

This is a suitable generalization of [1, Definition 3.1] where $n_o = n_i = 1$. In the sequel we shall not make any distinction between the two classes. Noncommutative fraction rings are treated in [13]. ¤

A consequence of Corollary 2.1 is

Corollary 2.2. Let $(\mathcal{N}_r, \mathcal{D}_r)$, (resp. $(\mathcal{D}_\ell, \mathcal{N}_\ell)$) be a pair of matrices such that i) $\mathcal{N}_r \in \hat{\mathcal{A}}_-(\sigma_o)^{n_o x n_i}$, $\mathcal{D}_r \in \hat{\mathcal{A}}_-(\sigma_o)^{n_i x n_i}$, (resp. $\mathcal{D}_\ell \in \hat{\mathcal{A}}_-(\sigma_o)^{n_o x n_o}$, $\mathcal{N}_\ell \in \hat{\mathcal{A}}_-(\sigma_o)^{n_o x n_i}$), and ii) $\det \mathcal{D}_r$ belongs to $\hat{\mathcal{A}}_-^\infty(\sigma_o)$, (resp. $\det \mathcal{D}_\ell$ belongs to $\hat{\mathcal{A}}_-^\infty(\sigma_o)$).

Under these conditions the pair $(\mathcal{N}_r, \mathcal{D}_r)$ is σ_o - r.c., (resp. the pair

$(\mathcal{D}_\ell, \mathcal{N}_\ell)$ is σ_o-ℓ.c.), if and only if rank $\begin{array}{c} n_i \\ n_o \end{array}\begin{bmatrix} \mathcal{D}_r(s) \\ \hline \mathcal{N}_r(s) \end{bmatrix} = n_i$ for all

$s \in \mathbb{C}_{\sigma_o+}$, (resp. rank $\begin{array}{c} \begin{array}{cc} n_o & n_i \end{array} \\ \left[\begin{array}{c|c} \mathcal{D}_\ell(s) & \mathcal{N}_\ell(s) \end{array}\right] \end{array} = n_o$ for all $s \in \mathbb{C}_{\sigma_o+}$).

<u>Proof</u>: We shall restrict ourselves to the right-coprime case.

$\Rightarrow$: follows from $[\mathcal{V}_r \mid \mathcal{U}_r]\begin{bmatrix} \mathcal{D}_r \\ \hline \mathcal{N}_r \end{bmatrix}(s) = I_{n_i}$ for all $s \in \mathbb{C}_{\sigma_o+}$ and Sylvester's rule.

$\Leftarrow$: Let $\hat{F} = \mathcal{N}_r\mathcal{D}_r^{-1}$ and observe that $\hat{F} \in \hat{\mathcal{B}}(\sigma_o)^{n_o \times n_i}$. Hence by Theorem 2.1 $\hat{F}$ admits a σ_o - r.r.$(\bar{\mathcal{N}}_r, \bar{\mathcal{D}}_r)$, i.e., $\bar{\mathcal{N}}_r \in \hat{\mathcal{A}}_-(\sigma_o)^{n_o \times n_i}$, $\bar{\mathcal{D}}_r \in \hat{\mathcal{A}}_-(\sigma_o)^{n_i \times n_i}$ such that $\hat{F} = \bar{\mathcal{N}}_r\bar{\mathcal{D}}_r^{-1}$, there exists $\bar{\mathcal{U}}_r \in \hat{\mathcal{A}}_-(\sigma_o)^{n_i \times n_o}$ and $\bar{\mathcal{V}}_r \in \hat{\mathcal{A}}_-(\sigma_o)^{n_o \times n_o}$ with $\bar{\mathcal{U}}_r\bar{\mathcal{N}}_r + \bar{\mathcal{V}}_r\bar{\mathcal{D}}_r = I_{n_i}$, and $\det \bar{\mathcal{D}}_r \in \hat{\mathcal{A}}_-^\infty(\sigma_o)$. Let $\mathcal{R} = \bar{\mathcal{D}}_r^{-1}\mathcal{D}_r$ and observe with $\mathcal{R} = \bar{\mathcal{U}}_r\mathcal{N}_r + \bar{\mathcal{V}}_r\mathcal{D}_r$ that $\mathcal{R}$ belongs to $\mathcal{A}_-(\sigma_0)^{n_i \times n_i}$ with $\det \mathcal{R}$ in $\hat{\mathcal{A}}_-^\infty(\sigma_o)$. Furthermore for all $s \in \mathbb{C}_{\sigma_o+}$ by assumption $n_i = \text{rank}\begin{bmatrix} \mathcal{N}_r(s) \\ \hline \mathcal{D}_r(s) \end{bmatrix} = \text{rank}\left\{\begin{bmatrix} \mathcal{N}_r(s) \\ \hline \mathcal{D}_r(s) \end{bmatrix}\mathcal{R}(s)\right\}$.

Hence by Sylvester's rule, $\det \mathcal{R}(s) \neq 0$ for all $s \in \mathbb{C}_{\sigma_o+}$. From the above it follows that $\mathcal{R}$ is an invertible element of $\hat{\mathcal{A}}_-(\sigma_o)^{n_i \times n_i}$ and there exists $\mathcal{U}_r = \mathcal{R}^{-1}\bar{\mathcal{U}}_r \in \hat{\mathcal{A}}_-(\sigma_o)^{n_i \times n_o}$ and $\mathcal{V}_r = \mathcal{R}^{-1}\bar{\mathcal{V}}_r \in \hat{\mathcal{A}}_-(\sigma_o)^{n_i \times n_i}$ such that $\mathcal{U}_r\mathcal{N}_r + \mathcal{V}_r\mathcal{D}_r = I_{n_i}$, i.e., $(\mathcal{N}_r, \mathcal{D}_r)$ is σ_o-r.c. ¤

For future applications we have also

<u>Corollary 2.3</u>. Let $\hat{F} \in \hat{\mathcal{B}}(\sigma_o)^{n_o \times n_i}$ admit a σ_o-r.r. $(\mathcal{N}_r, \mathcal{D}_r)$ and a σ_o-ℓ.r. $(\mathcal{D}_\ell, \mathcal{N}_\ell)$ where $\sigma_o \leq 0$. Then $(\mathcal{N}_r, \mathcal{D}_r)$ is a pseudo-right-coprime factorization (p.r.c.f.) of $\hat{F}$ and $(\mathcal{D}_\ell, \mathcal{N}_\ell)$ is a pseudo-left-coprime factorization (p.ℓ.c.f.) of $\hat{F}$ in the sense of [7, pp. 87-88].

Proof: Apply the definitions and the fact that $\hat{\mathcal{A}}_-(\sigma_o) \subset \hat{\mathcal{A}}(0) = \hat{\mathcal{A}}$ for all $\sigma_o \leq 0$. ¤

We shall now discuss poles of $\hat{F} \in \hat{\mathcal{B}}(\sigma_o)^{n_o \times n_i}$.

Definition 2.2. Let p be a pole of $\hat{F}$ belonging to $\hat{\mathcal{B}}(\sigma_o)^{n_o \times n_i}$. Then the MacMillan degree of the pole p of $\hat{F}$ is its maximal order as a pole of any minor of any order of $\hat{F}$.

Remark R.2.5 The definition of MacMillan degree here is based on the following properties which are true when $\hat{F} \in \mathbb{C}_p(s)^{n_o \times n_i}$, i.e. is a proper rational transfer matrix. The characteristic polynomial of $\hat{F} \in \mathbb{C}_p(s)^{n_o \times n_i}$ is defined to be the least common denominator of all minors of any order of $\hat{F}$ and is the characteristic polynomial det[sI-A] of any minimal realization [A,B,C,E] of $\hat{F}$, [16], [14]; the MacMillan degree of $\hat{F} \in \mathbb{C}_p(s)^{n_o \times n_i}$ is the degree of its characteristic polynomial, [14], [15], [16]: hence the order of a pole p of $\hat{F}$ as a zero of its characteristic polynomial is its maximal order as a pole of any minor of any order of $\hat{F}$: this can be called the MacMillan degree of the pole p because this is exactly the MacMillan degree of the term due to p in a partial fraction expansion of $\hat{F}$ [14], [15]. Moreover let (N_r, D_r), $((D_\ell, N_\ell)$resp.), be a right coprime, (resp. left coprime), polynomial matrix factorization of $\hat{F} \in \mathbb{C}_p(s)^{n_o \times n_i}$, i.e. $F = N_r D_r^{-1}$, $\det D_r \not\equiv 0$, (N_r, D_r) right coprime, (resp. $\hat{F} = D_\ell^{-1} N_\ell$, $\det D_\ell \not\equiv 0$, (D_ℓ, N_ℓ) left coprime), then $\det D_r$, ($\det D_\ell$ resp.), is equal modulo a nonzero constant to the characteristic polynomial of $\hat{F}$, [11], [17]: hence the MacMillan degree of the pole p of $\hat{F}$ is the order of p as a zero of $\det D_r$, ($\det D_\ell$ resp.). Something similar can be done for poles of $\hat{F} \in \hat{\mathcal{B}}(\sigma_o)^{n_o \times n_i}$ in $\mathbb{C}_{\sigma_o+}$.

Theorem 2.2. Let $\hat{F} \in \hat{\mathcal{B}}(\sigma_o)^{n_o x n_i}$ and let $(\mathcal{N}_r, \mathcal{D}_r)$, $((\mathcal{D}_\ell, \mathcal{N}_\ell)$ resp.) be a σ_o-r.r. of $\hat{F}$, (resp. σ_o-ℓ.r. of $\hat{F}$). Under these conditions:

a) $p \in \mathbb{C}_{\sigma_o+}$ is a pole of $\hat{F}$, if and only if $\det \mathcal{D}_r(p) = 0$, ($\det \mathcal{D}_\ell(p) = 0$).

b) If $p \in \mathbb{C}_{\sigma_o+}$ is a pole of $\hat{F}$, then the order of p as a zero of $\det \mathcal{D}_r$, ($\det \mathcal{D}_\ell$ resp.), is its MacMillan degree.

c) There exists $\hat{r}$ an invertible element of $\hat{\mathcal{A}}_-(\sigma_o)$ such that

$$\det \mathcal{D}_r = \hat{r} \det \mathcal{D}_\ell .$$

Proof: For a) and b) we shall restrict ourselves to a σ_o-r.r.

a) Using $\hat{F} = \mathcal{N}_r \mathcal{D}_r^{-1}$ and the existence of matrices $\mathcal{U}_r \in \hat{\mathcal{A}}_-(\sigma_o)^{n_i x n_o}$ and $\mathcal{V}_r \in \hat{\mathcal{A}}_-(\sigma_o)^{n_i x n_i}$ such that $\mathcal{U}_r \mathcal{N}_r + \mathcal{V}_r \mathcal{D}_r = I_{n_i}$, where all matrices have elements in $\hat{\mathcal{A}}_-(\sigma_o)$, it follows that

$$\mathcal{U}_r \hat{F} + \mathcal{V}_r = \mathcal{D}_r^{-1} \tag{2.10}$$

:this expression and $\hat{F}$ are meromorphic in an open half plane $\mathbb{C}_{\sigma_1+}$, some $\sigma_1 < \sigma_o$; furthermore $\mathcal{U}_r$ and $\mathcal{V}_r$ are analytic in $\mathring{\mathbb{C}}_{\sigma_1+}$ and bounded in $\mathbb{C}_{\sigma_1+}$. Let V(p) now be a neighborhood of $p \in \mathbb{C}_{\sigma_o+}$ within $\mathbb{C}_{\sigma_1+}$, then $\hat{F}$ has a pole at p iff $\hat{F}$ is unbounded in V(p). Now if $\det \mathcal{D}_r(p) = 0$ then $\mathcal{D}_r^{-1}$ is unbounded in V(p) and, because of (2.10), the same must hold for $\hat{F}$: otherwise the left hand side of (2.10) would be bounded there. Conversely if $\hat{F}$ is unbounded in V(p) then $\det \mathcal{D}_r(p) = 0$, otherwise $\hat{F} = \mathcal{N}_r \mathcal{D}_r^{-1}$ would be bounded there.

b) Observe that $(\mathcal{N}_r, \mathcal{D}_r)$ is σ_o-r.c. implies

$$\operatorname{rank} \begin{bmatrix} \mathcal{D}_r(s) \\ --- \\ \mathcal{N}_r(s) \end{bmatrix} = n_i \quad \forall s \in \mathbb{C}_{\sigma_1+}, \text{ some } \sigma_1 < \sigma_o . \tag{2.11}$$

We follow now the method of [18, proof of Fact 2, p. 518]. Let us express any minor of order ρ of $\hat{F} = \mathcal{N}_r \mathcal{D}_r^{-1}$ in terms of minors of order ρ of $\mathcal{N}_r$ and minors of order $n_i - \rho$ of $\mathcal{D}_r$. By well known methods and notations, [19, pp. 19-21], we consider the minor of $\hat{F}$ made of the intersections of rows $i_1, i_2, \ldots, i_\rho$ and columns $k_1, k_2, \ldots, k_\rho$, denoted by

$$\hat{F}\begin{pmatrix} i_1 & i_2 & \cdots & i_\rho \\ k_1 & k_2 & \cdots & k_\rho \end{pmatrix}$$

$$= \sum_{1 \le \ell_1 < \ell_2 < \ldots < \ell_\rho \le n} \mathcal{N}_r \begin{pmatrix} i_1 i_2 \ldots i_\rho \\ \ell_1 \ell_2 \ldots \ell_\rho \end{pmatrix} \mathcal{D}_r^{-1} \begin{pmatrix} \ell_1 \ell_2 \ldots \ell_\rho \\ k_1 k_2 \ldots k_\rho \end{pmatrix} \quad \text{with } n := \min(n_o, n_i) \tag{2.12}$$

$$= \frac{\sum_{1 \le \ell_1 < \ell_2 < \ldots < \ell_\rho \le n} \mathcal{N}_r \begin{pmatrix} i_1 i_2 \ldots i_\rho \\ \ell_1 \ell_2 \ldots \ell_\rho \end{pmatrix} (-1)^{\sum_{\gamma=1}^{\rho} \ell_\gamma + k_\gamma} \mathcal{D}_r \begin{pmatrix} k_1' k_2' \ldots k_{n_i-\rho}' \\ \ell_1' \ell_2' \ldots \ell_{n_i-\rho}' \end{pmatrix}}{\det \mathcal{D}_r}$$

where $\ell_1 < \ell_2 < \ldots < \ell_\rho$ and $\ell_1' < \ell_2' < \ldots < \ell_{n_i-\rho}'$, $k_1 < k_2 < \ldots < k_\rho$ and $k_1' < k_2' < \ldots < k_{n_i-\rho}'$ form a complete system of indices of $\{1, 2, \ldots, n_i\}$. Observe that the numerator of the above expression is proportional to the Laplace expansion [20, Exercise 7.2.3] of the minor of order n_i of $[\mathcal{D}_r^T \mathcal{N}_r^T]^T$ by adjoinging rows $i_1 i_2 \ldots i_\rho$ of $\mathcal{N}_r$ to rows $k_1' k_2' \ldots k_{n_i-\rho}'$ of $\mathcal{D}_r$. For all $s \in \mathbb{C}_{\sigma_1+}$, (2.11) implies that at least one such minor order n_i is nonzero. Hence for $s = p \in \mathbb{C}_{\sigma_o+}$, at least one numerator of an expression (2.12) is nonzero and b) follows using Definition 2.2.

c) Consider $\hat{r} = \det \mathcal{D}_r (\det \mathcal{D}_\ell)^{-1}$. Since $\det \mathcal{D}_r$ and $\det \mathcal{D}_\ell$ both belong to $\hat{\mathcal{A}}_-^\infty(\sigma_o)$ it follows that $\hat{r}$ is an invertible element of $\hat{\mathcal{B}}(\sigma_o) = [\mathcal{A}_-(\sigma_o)]^{-1} [\hat{\mathcal{A}}_-^\infty(\sigma_o)]^{-1}$, [1], [2]. Moreover because of b) $\hat{r}$ has neither poles nor zeros in $\mathbb{C}_{\sigma_o+}$. Hence $\hat{r}$ and $\hat{r}^{-1}$ belong to $\hat{\mathcal{A}}_-(\ _o)$, [1], [2]. ¤

Remark R2.6 By a similar reasoning as in the proof of Theorem 2.2c), i.e. by using Theorem 2.2b), it is easily shown that if $(\mathcal{N}_r,\mathcal{D}_r)$ and $(\mathcal{N}'_r,\mathcal{D}'_r)$ are two σ_o-r.r.'s of $\hat{F} \in \hat{\mathcal{B}}(\sigma_o)^{n_o x n_i}$ then there exists $\hat{r}$ an invertible element of $\hat{\mathcal{A}}_-(\sigma_o)$ such that $\det \mathcal{D}_r = \hat{r} \det \mathcal{D}'_r$, and similarly if $(\mathcal{D}_\ell,\mathcal{N}_\ell)$ and $(\mathcal{D}'_\ell,\mathcal{N}'_\ell)$ are two σ_o-ℓ.r.'s of $\hat{F} \in \hat{\mathcal{B}}(\sigma_o)^{n_o x n_i}$ then there exists $\hat{r}$ an invertible element of $\hat{\mathcal{A}}_-(\sigma_o)$ such that $\det \mathcal{D}_\ell = \hat{r} \det \mathcal{D}'_\ell$. Moreover the latter elements $\hat{r}$, (including the one mentioned in Theorem 2.2c)), will invertible elements of $\mathcal{R}(\sigma_o)$ if the denominator determinants actually belong to $\mathcal{R}^\infty(\sigma_o)$. This is the case in algorithm 2.1. ¤

We are now ready to look at the uniqueness of σ_o-admissible representations of $\hat{F} \in \hat{\mathcal{B}}(\sigma_o)^{n_o x n_i}$. This is a generalization of Theorem 3.4 of [1].

Theorem 2.3. Let $\hat{F} \in \hat{\mathcal{B}}(\sigma_o)^{n_o x n_i}$ and let $(\mathcal{N}_r,\mathcal{D}_r)$ and $(\mathcal{N}'_r,\mathcal{D}'_r)$ be two σ_o-r.r.'s of $\hat{F}$, (respectively let $(\mathcal{D}_\ell,\mathcal{N}_\ell)$ and $(\mathcal{D}'_\ell,\mathcal{N}'_\ell)$ be two σ_o-ℓ.r.'s of $\hat{F}$). Under these conditions there exists

$$\mathcal{R} \in \hat{\mathcal{A}}_-(\sigma_o)^{n_i x n_i}, \text{ (resp. } \mathcal{L} \in \hat{\mathcal{A}}_-(\sigma_o)^{n_o x n_o}) \tag{2.13}$$

such that

$$\mathcal{R} \text{ is invertible in } \hat{\mathcal{A}}_-(\sigma_o)^{n_i x n_i}, \text{(resp. } \mathcal{L} \text{ is invertible in } \hat{\mathcal{A}}_-(\sigma_o)^{n_o x n_o}) \tag{2.14}$$

and

$$\mathcal{D}_r = \mathcal{D}'_r \mathcal{R},\ \mathcal{N}_r = \mathcal{N}'_r \mathcal{R}, \text{ (resp. } \mathcal{D}_\ell = \mathcal{L}\mathcal{D}'_\ell,\ \mathcal{N}_\ell = \mathcal{L}\mathcal{N}'_\ell). \tag{2.15}$$

Moreover if $\mathcal{D}_r, \mathcal{D}'_r, \mathcal{D}_\ell, \mathcal{D}'_\ell$ have elements in $\mathcal{R}(\sigma_o)$ then $\mathcal{R}$ and $\mathcal{L}$ have elements in $\mathcal{R}(\sigma_o)$.

Proof. We shall restrict ourselves to σ_o-r.r.'s with elements in $\hat{\mathcal{A}}_-(\sigma_o)$. Define $\mathcal{R} = (\mathcal{D}'_r)^{-1}\mathcal{D}_r$. Observe that, since $\mathcal{D}_r$ and $\mathcal{D}'_r$ belong to $\hat{\mathcal{A}}_-(\sigma_o)^{n_i x n_i}$ with $\det \mathcal{D}_r$ and $\det \mathcal{D}'_r$ in $\hat{\mathcal{A}}^\infty_-(\sigma_o)$, it follows by Cramer's Rule that $\mathcal{R}$ and

$\mathcal{R}^{-1}$ are elements of $\hat{\mathcal{B}}(\sigma_o)^{n_i x n_i}$. Moreover from $\mathcal{N}_r = \hat{F}\mathcal{D}_r$ and $\mathcal{N}'_r = \hat{F}\mathcal{D}'_r$ it follows that (2.15) holds. Observe finally that $\mathcal{U}_r\mathcal{N}_r + \mathcal{V}_r\mathcal{D}_r = I_{n_i}$ and $\mathcal{U}'_r\mathcal{N}'_r + \mathcal{V}'_r\mathcal{D}'_r = I_{n_i}$ where all matrices have elements in $\hat{\mathcal{A}}_-(\sigma_o)$: hence by (2.15), $\mathcal{U}_r\mathcal{N}'_r + \mathcal{V}_r\mathcal{D}'_r = \mathcal{R}^{-1}$ and $\mathcal{U}'_r\mathcal{N}_r + \mathcal{V}'_r\mathcal{D}_r = \mathcal{R}$ where all matrices on the left hand sides have elements in $\hat{\mathcal{A}}_-(\sigma_o)$: so since $\hat{\mathcal{A}}_-(\sigma_o)$ is an algebra, $\mathcal{R}$ and $\mathcal{R}^{-1}$ belong to $\hat{\mathcal{A}}_-(\sigma_o)^{n_i x n_i}$, i.e. (2.13)-(2.14) hold. ¤

We give now a definition and a corollary needed for further developments.

<u>Definition 2.3</u>. We say that the pair $(\mathcal{N}_r,\mathcal{D}_r)$, $((\mathcal{D}_\ell,\mathcal{N}_\ell)$resp.), is an <u>$n_o$ x n_i σ_o-right representation</u> ($n_o x n_i$ σ_o-r.r.), (resp. is an <u>n_o x n_i σ_o-left representation</u> ($n_o x n_i$ σ_o-ℓ.r.)), iff

(i) $\mathcal{N}_r \in \hat{\mathcal{A}}_-(\sigma_o)^{n_o x n_i}$ and $\mathcal{D}_r \in \hat{\mathcal{A}}_-(\sigma_o)^{n_i x n_i}$, (resp. $\mathcal{D}_\ell \in \hat{\mathcal{A}}_-(\sigma_o)^{n_o x n_o}$ and $\mathcal{N}_\ell \in \hat{\mathcal{A}}_-(\sigma_o)^{n_o x n_i}$);

(ii) the pair $(\mathcal{N}_r,\mathcal{D}_r)$ is σ_o-r.c., (resp. the pair $(\mathcal{D}_\ell,\mathcal{N}_\ell)$ is σ_o-ℓ.c.);

(iii) det $\mathcal{D}_r \in \hat{\mathcal{A}}^\infty_-(\sigma_o)$, (resp. det $\mathcal{D}_\ell \in \hat{\mathcal{A}}^\infty_-(\sigma_o)$). ¤

<u>Remark R.2.7</u> It follows from Cramer's rule that if $(\mathcal{N}_r,\mathcal{D}_r)$ is an n_o x n_i σ_o-r.r. then $\hat{F} = \mathcal{N}_r\mathcal{D}_r^{-1} \in \hat{\mathcal{B}}(\sigma_o)^{n_o x n_i}$; moreover if we define two n_o x n_i σ_o-r.r.'s $(\mathcal{N}_r,\mathcal{D}_r)$ and $(\mathcal{N}'_r,\mathcal{D}'_r)$ <u>to be equivalent</u> if there exists $\mathcal{R}$ an invertible element of $\hat{\mathcal{A}}_-(\sigma_o)^{n_i x n_i}$ such that $(\mathcal{N}_r,\mathcal{D}_r) = (\mathcal{N}'_r\mathcal{R},\mathcal{D}_r\mathcal{R})$ then according to Theorem 2.3, there exists a bjection between the set of <u>equivalence classes</u> of n_o x n_i σ_o-r.r.'s $\{(\mathcal{N}_r,\mathcal{D}_r)\}$ and the elements $\hat{F}$ of $\hat{\mathcal{B}}(\sigma_o)^{n_o x n_i}$. As a consequence, <u>modulo an equivalence class</u>, one n_o x n_i σ_o-r.r. represents one element $F \in \hat{\mathcal{B}}(\sigma_o)^{n_o x n_i}$ and vice-versa. Something similar is also true for an n_o x n_i σ_o-ℓ.r. $(\mathcal{D}_\ell,\mathcal{N}_\ell)$.

<u>Corollary 2.4ℓ</u>. Let $\hat{F} \in \hat{\mathcal{B}}(\sigma_o)^{n_o x n_i}$. Then for <u>any</u> σ_o-ℓ.r. $(\mathcal{D}_\ell,\mathcal{N}_\ell)$ of $\hat{F}$ there exist matrices with elements in $\hat{\mathcal{A}}_-(\sigma_o)$, namely

$$\mathcal{U}_\ell, \mathcal{V}_\ell; \mathcal{N}_r, \mathcal{D}_r, \mathcal{U}_r, \mathcal{V}_r$$

such that

(i) $(\mathcal{N}_r, \mathcal{D}_r)$ is a σ_o-r.r. of $\hat{F}$

$$\begin{array}{c} \\ n_i \\ n_o \end{array} \begin{array}{c} \begin{array}{cc} n_i & n_o \end{array} \\ \left[\begin{array}{c|c} \mathcal{V}_r & \mathcal{U}_r \\ \hline -\mathcal{N}_\ell & \mathcal{D}_\ell \end{array}\right] \end{array} \begin{array}{c} \begin{array}{cc} n_i & n_o \end{array} \\ \left[\begin{array}{c|c} \mathcal{D}_r & -\mathcal{U}_\ell \\ \hline \mathcal{N}_r & \mathcal{V}_\ell \end{array}\right] \end{array} = \left[\begin{array}{c|c} I_{n_o} & 0 \\ \hline 0 & I_{n_o} \end{array}\right] \tag{2.16}$$

where if we call the matrices on the left hand side of (2.16), $\mathcal{W}$ respectively $\mathcal{W}^{-1}$, then obviously $\mathcal{W}$ is an invertible element of $\hat{\mathcal{A}}_-(\sigma_o)^{(n_i+n_o)\times(n_i+n_o)}$ and without loss of generality

$$\det \mathcal{W} = \det \mathcal{W}^{-1} \equiv 1. \tag{2.16a}$$

<u>Proof</u>: Apply Theorem 2.1 and use Theorem 2.3 for identification purposes.

<u>Remark R2.8</u> It is obvious that a similar Theorem is valid when we start from any σ_o-r.r. $(\mathcal{N}_r, \mathcal{D}_r)$ of $\hat{F}$: call this Corollary 2.4r. ¤

3. Feedback System Stability

Consider the multi-input multi-output feedback system S shown in Fig. 3.1, where all relevant expressions are described in the frequency domain: i) usually $\hat{P}$ and $\hat{C}$ are the <u>plant</u> and <u>controller transfer functions</u> with respective <u>inputs</u> $\hat{u}_p$, $\hat{u}_c$ and <u>outputs</u> $\hat{y}_p$, $\hat{y}_c$; ii) $\hat{u}_s$ is the system input and $\hat{w}_p$ the <u>plant input disturbance</u>; iii) $\hat{y} = \hat{y}_p$ is the <u>system output</u> and $\hat{e}_s = \hat{u}_s - \hat{y}_s = \hat{u}_c$ the <u>system error</u>.

Note that if we had additive disturbances applied at the <u>plant output</u>, say $\hat{w}_o$, then their effect is equivalent to an <u>additional system input</u> $-\hat{w}_o$.

From Fig. 3.1 the system equations are

$$\begin{array}{c} n_o \\ n_i \end{array}\begin{bmatrix} \hat{u}_s \\ \hline \hat{w}_p \end{bmatrix} = \begin{array}{c} \\ n_o \\ n_i \end{array}\begin{array}{c} \begin{array}{cc} n_o & n_i \end{array} \\ \left[\begin{array}{c|c} I_{n_o} & \hat{P} \\ \hline -\hat{C} & I_{n_i} \end{array}\right] \end{array}\begin{array}{c} \\ \begin{bmatrix} \hat{u}_c \\ \hline \hat{u}_p \end{bmatrix} \end{array}\begin{array}{c} n_o \\ n_i \end{array} ; \begin{array}{c} \\ \begin{bmatrix} \hat{y}_c \\ \hline \hat{y}_p \end{bmatrix} \end{array}\begin{array}{c} n_o \\ n_i \end{array} = \begin{array}{c} \\ n_i \\ n_o \end{array}\begin{array}{c} \begin{array}{cc} n_o & n_i \end{array} \\ \left[\begin{array}{c|c} \hat{C} & 0 \\ \hline 0 & \hat{P} \end{array}\right] \end{array}\begin{array}{c} \\ \begin{bmatrix} \hat{u}_c \\ \hline \hat{u}_p \end{bmatrix} \end{array}. \tag{3.1}$$

Let

$$\hat{G} = \begin{array}{c} \\ n_o \\ n_i \end{array}\begin{array}{c} \begin{array}{cc} n_o & n_i \end{array} \\ \left[\begin{array}{c|c} 0 & \hat{P} \\ \hline -\hat{C} & 0 \end{array}\right] \end{array}, \quad J = \begin{array}{c} \\ n_o \\ n_i \end{array}\begin{array}{c} \begin{array}{cc} n_o & n_i \end{array} \\ \left[\begin{array}{c|c} 0 & I_{n_o} \\ \hline -I_{n_i} & 0 \end{array}\right] \end{array}, \tag{3.2}$$

and observe that

$$\left[\begin{array}{c|c} \hat{C} & 0 \\ \hline 0 & \hat{P} \end{array}\right] = J^{-1}\hat{G}.$$

Hence the system's input-error transfer function $\hat{H}_e : (\hat{u}_s,\hat{w}_p) \mapsto (\hat{u}_c,\hat{u}_p)$ and input-output transfer function $\hat{H}_y : (\hat{u}_s,\hat{w}_p) \mapsto (\hat{y}_c,\hat{y}_p)$ satisfy

$$\hat{H}_e = (I+\hat{G})^{-1}, \tag{3.3}$$

$$J\hat{H}_y = I - \hat{H}_c. \tag{3.4}$$

We have also the following:

<u>System Assumptions</u>

A1) For some $\sigma_o \leq 0$

$$\hat{P} \in \hat{\mathcal{B}}(\sigma_o)^{n_o x n_i} \text{ and } \hat{C} \in \hat{\mathcal{B}}(\sigma_o)^{n_i x n_o}, \tag{3.5}$$

where

$$\hat{P} \text{ has a } \sigma_o\text{-}\ell.r.\ (\mathcal{R}_{p\ell},\mathcal{N}_{p\ell}), \tag{3.6}$$

$$\hat{C} \text{ has a } \sigma_o\text{-}r.r.\ (\mathcal{N}_{cr},\mathcal{D}_{cr}). \tag{3.7}$$

A2) $\det[I_{n_o}+\hat{P}\hat{C}] = \det[I_{n_i}+\hat{C}\hat{P}]$ is bounded away from zero at infinity in $\mathbb{C}_{\sigma_o+}$. (3.8) ¤

Consequently by the properties of the algebras $\hat{\mathcal{A}} = \hat{\mathcal{A}}(0), \hat{\mathcal{A}}_-(\sigma_o) \subset \hat{\mathcal{A}}$ for $\sigma_o \leq 0$, $\hat{\mathcal{B}}(\sigma_o)$, [1], [2] and by (3.1)-(3.8):

$$\hat{G} \in \hat{\mathcal{B}}(\sigma_o)^{(n_i+n_o)x(n_i+n_o)} \tag{3.9}$$

$$J \text{ and } J^{-1} \text{ belong to } \hat{\mathcal{A}}_-(\sigma_o)^{(n_i+n_o)x(n_i+n_o)} \subset \hat{\mathcal{A}}^{(n_i+n_o)x(n_i+n_o)}, \tag{3.10}$$

$$\det[I+\hat{G}]^{-1} = \det[I_{n_o}+\hat{P}\hat{C}]^{-1} = \det[I_{n_i}+\hat{C}\hat{P}]^{-1} \in \hat{\mathcal{B}}(\sigma_o), \tag{3.11}$$

$$\hat{H}_e \text{ and } \hat{H}_y \text{ belong to } \hat{\mathcal{B}}(\sigma_o)^{(n_i+n_o)x(n_i+n_o)}, \tag{3.12}$$

$$\hat{H}_e \in \hat{\mathcal{A}}^{(n_i+n_o)x(n_i+n_o)} \Leftrightarrow \hat{H}_y \in \hat{\mathcal{A}}^{(n_i+n_o)x(n_i+n_o)}, \tag{3.13}$$

$$\hat{H}_e \in \hat{\mathcal{A}}_-(\sigma_o)^{(n_i+n_o)x(n_i+n_o)} \Leftrightarrow \hat{H}_y \in \hat{\mathcal{A}}_-(\sigma_o)^{(n_i+n_o)x(n_i+n_o)}. \tag{3.14}$$

It makes therefore sense to have the following:

<u>Definition 3.1</u> [18]. The feedback system S described by (3.1)-(3.8) is said to be <u>$\mathcal{A}$-stable</u> iff both its input-error transfer function $\hat{H}_e$ and its input-output transfer function $\hat{H}_y$ belong to $\hat{\mathcal{A}}^{(n_i+n_o)x(n_i+n_o)}$.

<u>Remark R3.1</u> From (3.13) once system S is $\mathcal{A}$-stable then its input-output map $(u_s, w_p) \longmapsto (u_c = e_s, u_p; y_c, y_p = y_s)$ will (i), for any $p \in [1,\infty]$, take L_p-inputs into L_p-outputs with finite gain and (ii) will take continuous and bounded inputs, (periodic inputs, almost periodic inputs, resp.) into outputs belonging to the same classes, [7], [21]. ¤

By (3.5)-(3.7) the function $\hat{\chi}$ defined in $\mathbb{C}_{\sigma_1+}$ (for some $\sigma_1 < \sigma_o$) by:

$$\hat{\chi} := \det[\mathcal{D}_{p\ell}\mathcal{D}_{cr} + \mathcal{N}_{p\ell}\mathcal{N}_{cr}] \tag{3.15}$$

is an element of $\hat{\mathcal{A}}_-(\sigma_o)$ and is called <u>characteristic function of S</u> (in $\mathbb{C}_{\sigma_o+}$).

The importance of $\hat{\chi}$ is discussed next.

Theorem 3.1. Consider a feedback system S specified by (3.1)-(3.8). Consequently (3.9)-(3.14) hold. Under these conditions:

(i) the system S is $\mathcal{A}$-stable if and only if

$$\hat{\chi}(s) \neq 0 \quad \text{for all } s \in \mathbb{C}_+ ; \tag{3.16}$$

(ii) $p \in \mathbb{C}_{\sigma_o+}$ is a zero of $\hat{\chi}(\cdot)$ (3.17)

if and only if

$$p \in \mathbb{C}_{\sigma_o+} \text{ is a pole of } \hat{H}_e \tag{3.18}$$

if and only if

$$p \in \mathbb{C}_{\sigma_o+} \text{ is a pole of } \hat{H}_y; \tag{3.19}$$

(iii) the MacMillan degrees of $p \in \mathbb{C}_{\sigma_o+}$ as a pole of $\hat{H}_e$ and $\hat{H}_y$ are the same and equal to the multiplicity of p as a zero of $\hat{\chi}(\cdot)$.

Proof of (i): First from the definition (3.15) and (3.5)-(3.7)

$$\hat{\chi} = \det[I_{n_o} + \hat{P}\hat{C}] \det \mathcal{D}_{cr} \det \mathcal{D}_{p\ell} \tag{3.20}$$

Hence by (3.8) and since both $\det \mathcal{D}_{cr}$ and $\det \mathcal{D}_{p\ell}$ belong to $\hat{\mathcal{A}}_-^\infty(\sigma_o)$, $\hat{\chi}$ is bounded away from zero at infinity in $\mathbb{C}_{\sigma_o+}$. Thus (3.16) is equivalent to $\inf\{|\hat{\chi}(s)| : s \in \mathbb{C}_+\} > 0$. Now the conclusion follows by condition (35) of Theorem 1 of [18]: indeed $\hat{G}_1$ and $\hat{G}_2$ of [18] correspond to the present $\hat{C}$ and $\hat{P}$; by Corollary 2.3 $(\mathcal{D}_{p\ell}, \mathcal{N}_{p\ell})$, $((\mathcal{N}_{cr}, \mathcal{D}_{cr})$, resp.), is a pseudo left-coprime factorization of $\hat{P}$, (resp. pseudo right-coprime factorization of $\hat{C}$); finally, as indicated in the conclusions of [18], Theorem 1 of [18] applies to rectangular systems (i.e. $n_o \neq n_i$).

Proof of (ii) and (iii): Since $\hat{P} \in \hat{\mathcal{B}}(\sigma_o)^{n_o \times n_i}$, by Theorem 2.1 it follows that

$$\hat{P} \text{ has a } \sigma_o\text{-r.r. } (\mathcal{N}_{pr}, \mathcal{D}_{pr}), \tag{3.21}$$

moreover by (3.21), (3.6) and Theorem 2.2c):

there exists $\hat{r}$ an invertible element of $\hat{\mathcal{A}}_-(\sigma_o)$ such that

$$\det \mathcal{D}_{p\ell} = \hat{r} \det \mathcal{D}_{pr}. \tag{3.22}$$

Recall now relations (3.2)-(3.4), (3.21), (3.7) and consider the following matrices with elements in $\hat{\mathcal{A}}_-(\sigma_o)$, namely:

$$\mathcal{N} = \begin{array}{c|cc} & n_o & n_i \\ \hline n_o & 0 & \mathcal{N}_{pr} \\ n_i & -\mathcal{N}_{cr} & 0 \end{array}, \quad \mathcal{D} = \begin{array}{c|cc} & n_o & n_i \\ \hline n_o & \mathcal{D}_{cr} & 0 \\ n_i & 0 & \mathcal{D}_{pr} \end{array}. \tag{3.23}$$

Then it follows easily using Corollary 2.2:

$(\mathcal{N},\mathcal{D})$ is a σ_o-r.r. of $\hat{G} \in \hat{\mathcal{B}}(\sigma_o)^{(n_i+n_o)\times(n_i+n_o)}$,

and similarly, using $\hat{H}_e = (I+G)^{-1} = \mathcal{D}(\mathcal{D}+\mathcal{N})^{-1}$ and

$\hat{H}_y = J^{-1}\hat{G}(I+\hat{G})^{-1} = J^{-1}\mathcal{N}(\mathcal{D}+\mathcal{N})^{-1}$:

$$(\mathcal{D},\mathcal{D}+\mathcal{N}) \text{ is a } \sigma_o\text{-r.r. of } \hat{H}_e \in \hat{\mathcal{B}}(\sigma_o)^{(n_i+n_o)\times(n_i+n_o)}, \tag{3.24}$$

$$(J^{-1}\mathcal{N},\mathcal{D}+\mathcal{N}) \text{ is a } \sigma_o\text{-r.r. of } \hat{H}_y \in \hat{\mathcal{B}}(\sigma_o)^{(n_i+n_o)\times(n_i+n_o)}. \tag{3.25}$$

Now, since by (3.23), (3.21) and (3.7)

$$\mathcal{D}+\mathcal{N} = \begin{array}{c|cc} & n_o & n_i \\ \hline n_o & \mathcal{D}_{cr} & \mathcal{N}_{pr} \\ n_i & -\mathcal{N}_{cr} & \mathcal{D}_{pr} \end{array} = \begin{array}{c|cc} & n_o & n_i \\ \hline n_o & I_{n_o} & \hat{P} \\ n_i & -\hat{C} & I_{n_i} \end{array} \begin{array}{c|cc} & n_o & n_i \\ \hline n_o & \mathcal{D}_{cr} & 0 \\ n_i & 0 & \mathcal{D}_{pr} \end{array},$$

$$\det[\mathcal{D}+\mathcal{N}] = \det[I_{n_o}+\hat{P}\hat{C}] \det \mathcal{D}_{cr} \det \mathcal{D}_{pr}. \tag{3.26}$$

Hence on comparing (3.20), (3.26) and (3.22):

there exists $\hat{r}$ an invertible element of $\hat{\mathcal{A}}_-(\sigma_o)$ such that

$$\hat{\chi} = \hat{r} \det[\mathcal{D}+\mathcal{N}]. \tag{3.27}$$

Recalling that $\hat{r}$ is bounded and bounded away from zero in $\mathbb{C}_{\sigma_1+}$, some $\sigma_1 < \sigma_o$, it follows by Theorem 2.2a) and (3.24), (3.25), (3.27) that the equivalences (3.17) $\Longleftrightarrow$ (3.18) $\Longleftrightarrow$ (3.19) hold; similarly conclusion iii) is a consequence of Theorem 2.3b) and (3.24), (3.25), (3.27). ¤

Remarks. R3.2 Equation (3.15) defining $\hat{\chi}$ is not the only possible expression for a characteristic function of S in $\mathbb{C}_{\sigma_o+}$: observe that any element $\hat{r}\hat{\chi}$ of $\hat{\mathcal{A}}_-(\sigma_o)$, where $\hat{r}$ is an invertible element of $\hat{\mathcal{A}}_-(\sigma_o)$ can be used instead of $\hat{\chi}$ for having the defining properties of a characteristic function required in Theorem 3.1. We call therefore characteristic function of S in $\mathbb{C}_{\sigma_o+}$ any element of the equivalence class of elements of $\mathcal{A}_-(\sigma_o)$ being equal to $\hat{\chi}$, defined by (3.15), modulo an invertible element of $\hat{\mathcal{A}}_-(\sigma_o)$. Observe that such a characteristic function is obtained if in (3.15) i) the σ_o-ℓ.r. $(\mathcal{D}_{p\ell},\mathcal{N}_{p\ell})$ of $\hat{P}$ is replaced by another σ_o-ℓ.r. $(\mathcal{D}'_{p\ell},\mathcal{N}'_{p\ell})$ or if the σ_o-r.r. $(\mathcal{N}_{cr},\mathcal{D}_{cr})$ of $\hat{C}$ is replaced by another σ_o-r.r. $(\mathcal{N}'_{cr},\mathcal{D}'_{cr})$ (use Theorem 2.3), and ii) if we use left or right σ_o-representations for $\hat{P}$ and/or $\hat{C}$, (use (3.20) and Theorem 2.2c), see also Theorem 1 of [18]). The characteristic function $\hat{\chi}$ given by (3.15) was chosen because it suits best our present purposes.

R3.3 Condition (3.16) can be checked by the graphical methods, [22], [23]. ¤

R3.4 Note that according to [32, Theorem 3], the $\mathcal{A}$-stability of closed loop system S is robust. ¤

4. Preliminary "Algebraic" Problem for Compensator Design

We are given $\hat{F} \in \hat{\mathcal{B}}(\sigma_o)^{n_o \times n_i}$ where

$$(\mathcal{D}_\ell,\mathcal{N}_\ell) \text{ is any } \sigma_o\text{-}\ell\text{.r. of } \hat{F} \in \hat{\mathcal{B}}(\sigma_o)^{n_o \times n_o}. \tag{4.1}$$

Recall from Definition 2.1 that $\mathcal{D}_\ell \in \hat{\mathcal{A}}_-(\sigma_o)^{n_o \times n_o}$, $\mathcal{N}_\ell \in \hat{\mathcal{A}}_-(\sigma_o)^{n_o \times n_i}$, the pair $(\mathcal{D}_\ell,\mathcal{N}_\ell)$ is σ_o-ℓ.c. and $\det \mathcal{D}_\ell \in \hat{\mathcal{A}}_-^{\infty}(\sigma_o)$.

We want to solve problem (COMP) defined by

(COMP): Under assumption (4.1) for any $\mathcal{D} \in \hat{\mathcal{A}}_-(\sigma_o)^{n_o \times n_o}$ solve the equation

$$\mathcal{N}_\ell \mathcal{X} + \mathcal{D}_\ell \mathcal{Y} = \mathcal{D} \tag{4.2}$$

for

$$\mathcal{X} \in \hat{\mathcal{A}}_-(\sigma_o)^{n_i x n_o} \text{ and } \mathcal{Y} \in \hat{\mathcal{A}}_-(\sigma_o)^{n_o x n_o}. \tag{4.3}$$

<u>Preliminary information</u>: because of (4.1), according to Corollary 2.4ℓ, there exist six matrices with elements in $\hat{\mathcal{A}}_-(\sigma_o)$ namely

$$\mathcal{U}_\ell, \mathcal{V}_\ell; \mathcal{N}_r, \mathcal{D}_r, \mathcal{U}_r, \mathcal{V}_r$$

such that

(i) $(\mathcal{N}_r, \mathcal{D}_r)$ is a σ_o-r.r. of $\hat{F}$ (4.4)

(ii)

$$\begin{array}{c} \\ n_i \\ n_o \end{array}\begin{array}{c} \begin{array}{cc} n_i & n_o \end{array} \\ \left[\begin{array}{c|c} \mathcal{V}_r & \mathcal{U}_r \\ \hline -\mathcal{N}_\ell & \mathcal{D}_\ell \end{array}\right] \end{array} \begin{array}{c} \begin{array}{cc} n_i & n_o \end{array} \\ \left[\begin{array}{c|c} \mathcal{D}_r & -\mathcal{U}_\ell \\ \hline \mathcal{N}_r & \mathcal{V}_\ell \end{array}\right] \end{array} = \left[\begin{array}{c|c} I_{n_i} & 0 \\ \hline 0 & I_{n_o} \end{array}\right] \tag{4.5}$$

where if we call the matrices on the left hand side of (4.5) $\mathcal{W}$, respectively $\mathcal{W}^{-1}$, then obviously $\mathcal{W}$ is an invertible element of $\hat{\mathcal{A}}_-(\sigma_o)^{(n_i+n_o)x(n_i+n_o)}$ and without loss of generality

$$\det \mathcal{W} = \det \mathcal{W}^{-1} \equiv 1. \tag{4.5a}$$

Recall further by remark R2.7) that, modulo an equivalence class, one n_i x n_o σ_o-r.r. $(\mathcal{N}, \mathcal{D})$ represents one element of $\hat{\mathcal{B}}(\sigma_o)^{n_i x n_o}$.

We are then lead to the following:

<u>Theorem 4.1</u> Consider the problem (COMP). Under the assumptions and notations specified above:

(i) All the solutions $(\mathcal{X}, \mathcal{Y})$ of (COMP) are given by

$$\begin{array}{c} \\ n_i \\ n_o \end{array}\begin{array}{c} n_o \\ \left[\begin{array}{c} -\mathcal{X} \\ \hline \mathcal{Y} \end{array}\right] \end{array} = \mathcal{W}^{-1} \begin{array}{c} n_o \\ \left[\begin{array}{c} \mathcal{N} \\ \hline \mathcal{D} \end{array}\right] \end{array} \begin{array}{c} \\ n_i \\ n_o \end{array} \quad \text{i.e. } -\mathcal{X} = \mathcal{D}_r \mathcal{N} - \mathcal{U}_\ell \mathcal{D}; \mathcal{Y} = \mathcal{N}_r \mathcal{N} + \mathcal{V}_\ell \mathcal{D} \tag{4.6}$$

where $\mathcal{N}$ is an arbitrary element of $\hat{\mathcal{A}}_-(\sigma_o)^{n_i x n_o}$.

Moreover, by (4.5), (4.6) is equivalent to

$$\begin{array}{c} \\ n_i \\ n_o \end{array}\begin{array}{c} n_o \\ \left[\begin{array}{c} \mathcal{N} \\ \hline \mathcal{D} \end{array}\right] \end{array} = \mathcal{W}\begin{array}{c} n_o \\ \left[\begin{array}{c} -\mathcal{X} \\ \hline \mathcal{Y} \end{array}\right] \end{array}\begin{array}{c} \\ n_i \\ n_o \end{array} \quad \text{i.e. } \mathcal{N} = -\mathcal{V}_r\mathcal{X}+\mathcal{U}_r\mathcal{Y} \quad \mathcal{D} = \mathcal{N}_\ell\mathcal{X}+\mathcal{D}_\ell\mathcal{Y} \tag{4.7}$$

and

$$(\mathcal{X},\mathcal{Y}) \text{ is } \sigma_o\text{-r.c. if and only if } (\mathcal{N},\mathcal{D}) \text{ is } \sigma_o\text{-r.c.} \tag{4.8}$$

(ii) If in addition

$$\hat{F}(s) \to 0_{n_o x n_i} \quad \text{as } |s| \to \infty \text{ in } \mathbb{C}_{\sigma_o+} \tag{4.9}$$

then

$$(\mathcal{X},\mathcal{Y}) \text{ is an } n_i \times n_o\ \sigma_o\text{-r.r. if and only if } (\mathcal{N},\mathcal{D}) \text{ is an } n_i \times n_o\ \sigma_o\text{-r.r.} \tag{4.10}$$

¤

Hence according to Remark R2.7) all solutions $(\mathcal{X},\mathcal{Y})$ of (COMP) resulting in elements of $\hat{\mathcal{B}}(\sigma_o)^{n_i x n_o}$ are generated by (4.6) by the class

$$\{\mathcal{N} \in \hat{\mathcal{A}}_-(\sigma_o)^{n_i x n_o};\ (\mathcal{N},\mathcal{D}) \text{ is an } n_i \times n_o\ \sigma_o\text{-r.r.}\} \tag{4.11}$$

<u>Proof of (i)</u>: Note that if $(\mathcal{X},\mathcal{Y})$ is given by (4.6), then using (4.5), $(\mathcal{X},\mathcal{Y})$ is a solution of (4.2)-(4.3), i.e. of (COMP). Now let $(\mathcal{X},\mathcal{Y})$ be a solution of (COMP), i.e., of (4.2)-(4.3). Then a particular solution is $(\mathcal{X},\mathcal{Y}) = (\mathcal{U}_\ell\mathcal{D}, \mathcal{V}_\ell\mathcal{D})$: indeed by (4.5) $\mathcal{N}_\ell\mathcal{U}_\ell + \mathcal{D}_\ell\mathcal{V}_\ell = I_{n_o}$. It remains to add to this particular solution the general solution of the homogeneous equation corresponding to (4.2), namely

$$\mathcal{N}_\ell\mathcal{X}+\mathcal{D}_\ell\mathcal{Y} = 0 \tag{4.12}$$

We claim that any solution $(\mathcal{X},\mathcal{Y})$ of (4.12) can be put into the form $(\mathcal{X},\mathcal{Y}) = (-\mathcal{D}_r\mathcal{N},\mathcal{N}_r\mathcal{N})$ <u>for some $\mathcal{N} \in \hat{\mathcal{A}}_-(\sigma_o)^{n_i x n_o}$</u>. To prove this, let $(\mathcal{X},\mathcal{Y})$ be <u>any</u> solution of (4.12) and define $\mathcal{N} \in \hat{\mathcal{B}}(\sigma_o)^{n_i x n_o}$ by:

$$\mathcal{N} := \mathcal{D}_r^{-1}\mathcal{X}. \tag{4.13}$$

Hence by (4.12), (4.1) and (4.4)

$$\mathcal{Y} = \mathcal{D}_\ell^{-1}\mathcal{N}_\ell\mathcal{D}_r\mathcal{N} = \mathcal{N}_r\mathcal{N}. \tag{4.14}$$

(4.13) and (4.14) show that any solution has the required form but it remains to be shown that $\mathcal{N} \in \hat{\mathcal{A}}_-(\sigma_o)^{n_i x n_o}$. Use (4.5), (4.13) and (4.14) to obtain $-\mathcal{V}_r\mathcal{X} + \mathcal{V}_r\mathcal{Y} = \mathcal{N}$, where all matrices on the left hand side have elements in $\hat{\mathcal{A}}_-(\sigma_o)$. Therefore $\mathcal{N} \in \hat{\mathcal{A}}_-(\sigma_o)^{n_i x n_o}$.

The equivalence of (4.6) and (4.7) is a consequence of (4.5). Equivalence (4.8) is also a consequence of (4.5) and Corollary 2.2.

<u>Proof of (ii)</u>: Observe that by (4.1) and (4.9)

$$\det \mathcal{D}_\ell \in \hat{\mathcal{A}}_-^\infty(\sigma_o) \tag{4.15}$$

and

$$\mathcal{N}_\ell(s) \to 0_{n_o x n_i} \text{ as } |s| \to \infty \text{ in } \mathbb{C}_{\sigma_o+} \tag{4.16}$$

where (4.16) follows by $\mathcal{N}_\ell = \mathcal{D}_\ell\hat{F}$, (4.9) and because all elements of $\mathcal{D}_\ell$ are in $\hat{\mathcal{A}}_-(\sigma_o)$, therefore are bounded in $\mathbb{C}_{\sigma_o+}$. Now by (4.7) and (4.16), for any sequence $(s_i)_{i=1}^\infty \subset \mathbb{C}_{\sigma_o+}$ with $|s_i| \to \infty$, $i \to \infty$, we have $\liminf|\det \mathcal{D}(s_i)| = \liminf|\det \mathcal{D}_\ell(s_i)||\det \mathcal{Y}(s_i)|$: since by (4.15) $\det \mathcal{D}_\ell$ is bounded and bounded away from zero at infinity in $\mathbb{C}_{\sigma_o+}$, it follows that

$$\det \mathcal{Y} \in \hat{\mathcal{A}}_-^\infty(\sigma_o) \text{ if and only if } \det \mathcal{D} \in \hat{\mathcal{A}}_-^\infty(\sigma_o). \tag{4.17}$$

Hence equivalence (4.10) is established using equivalences (4.8) and (4.17). ¤

<u>Remark R4.2</u>. Problem (COMP) discussed above is a generalization of a method for compensator design in the lumped case found in [3], [4]. In the sequel the solution of this problem will be used to show constructively that any plant $\hat{P} \in \hat{\mathcal{B}}(\sigma_o)^{n_o x n_i}$ for some $\sigma_o < 0$, with $\hat{P}(s) \to 0$ as $|s| \to \infty$

in $\mathbb{C}_{\sigma_o+}$, can be stabilized by dynamic output feedback in the sense of Fig. 3.1: more precisely a compensator $\hat{C}$, (see Fig. 3.1), should be found such that the closed loop system S is $\mathcal{A}$-stable and both the input-error- and input-output transfer functions $\hat{H}_e$ resp. $\hat{H}_y$ have a given set of poles in the vertical strip $[\sigma_o,0)$ with specified MacMillan degrees. Moreover we would like that $\hat{C}$ would be such that the closed loop system S is a robust servomechanism. Known stabilization techniques in the lumped case include the design of a state estimator and the use of state feedback or the design of a controller, [16], [24], [25], [26]. Multivariable servomechanisms are discussed in [27], [28], [29], [30], [31], [32], [33], [34].

5. Compensator Design for Stabilization, Tracking and Disturbance Rejection

We are given a plant $\hat{P}$ such that

$$\hat{P} \in \hat{\mathcal{B}}(\sigma_o)^{n_o \times n_i} \text{ for some } \sigma_o < 0 \tag{5.1}$$

where

$$\hat{P} \text{ has a } \sigma_o - \ell.r.(\mathcal{D}_{p\ell}, \mathcal{N}_{p\ell}) \text{ with } \mathcal{D}_{p\ell} \in \mathcal{R}(\sigma_o)^{n_o \times n_o}; \tag{5.2}$$

the elements of $P = \mathcal{L}^{-1}[\hat{P}]$ are <u>real-valued</u> Laplace transformable distributions with support on $\mathbb{R}_+$; (5.3)

$$\hat{P}(s) \to 0_{n_o \times n_i} \quad \text{as } |s| \to \infty \text{ in } \mathbb{C}_{\sigma_o+}. \tag{5.4}$$

Reference signals (to be tracked) are generated as follows:

$$\left.\begin{array}{l} x_s(0) \text{ is an arbitrary vector in } \mathbb{R}^{n_s} \text{ and} \\ \dot{x}_s(t) = A_s x_s(t), \quad u_s(t) = C_s x_s(t), \quad \forall t \in \mathbb{R}_+ \\ \text{where} \\ x_s(t) \in \mathbb{R}^{n_s}, \quad A_s \in \mathbb{R}^{n_s \times n_s}, \quad C_s \in \mathbb{R}^{n_o \times n_s} \\ (C_s, A_s) \text{ is a completely observable pair;} \\ \text{thus} \\ \hat{u}(s) = C(sI-A)^{-1} x_s(0). \end{array}\right\} \tag{5.5}$$

Disturbance signals (to be rejected) are generated as follows:

$$\left.\begin{array}{l} x_w(0) \text{ is an arbitrary vector in } \mathbb{R}^{n_w} \text{ and} \\ \dot{x}_w(t) = A_w x_w(t), \quad w_p(t) = C_w x_w(t), \quad \forall t \in \mathbb{R}_+ \\ \text{where} \\ (C_w, A_w) \text{ is a completely observable pair;} \\ \text{thus} \\ \hat{w}_p(s) = C_w(sI-A_w)^{-1} x_w(0). \end{array}\right\} \tag{5.6}$$

Furthermore, with $\sigma(\ldots)$denoting the spectrum of the square matrix between the parentheses, we assume that

$$\sigma(A_w) \cup \sigma(A_s) \subset \mathbb{C}_+. \tag{5.7}$$

Let now ψ_{A_s} and ψ_{A_w} denote the <u>minimal</u> polynomials of A_s respectively A_w and let

$$\phi := \text{monic least common multiple of } \psi_{A_w} \text{ and } \psi_{A_s} \tag{5.8}$$

$$q = \text{degree of } \phi =: \partial\phi \tag{5.9}$$

Let $\mathcal{Z}[\phi]$ denote the list of zeros of ϕ, i.e., let z_i be a zero of ϕ, m_i denote its multiplicity and let ϕ admit k distinct zeros, then

$$\mathcal{Z}[\phi] = (\underbrace{z_1,\ldots z_1}_{m_1};\ \underbrace{z_2,\ldots,z_2}_{m_2};\ \ldots\ ;\ \underbrace{z_k,\ldots,z_k}_{m_k}) \tag{5.10}$$

$$\{z_1,\ldots,z_k\} = \sigma(A_w) \cup \sigma(A_s), \tag{5.11}$$

$$q = \sum_{i=1}^{k} m_i, \quad z \in \mathcal{Z}[\phi] \Leftrightarrow \bar{z} \in \mathcal{Z}[\phi] \tag{5.12}$$

and

$$\left.\begin{array}{l}\text{the maximal order of } z_i \text{ as a pole of any element} \\ \text{of } C_r(sI-A_s)^{-1}x_r(0) \text{ and } C_w(sI-A_w)^{-1}x_w(0) \quad \text{any } x_s(0) \in \mathbb{R}^{n_s} \\ \text{any } x_w(0) \in \mathbb{R}^{n_w} \text{ is } m_i \text{ (see Appendix 2).}\end{array}\right\} \tag{5.13}$$

For tracking and disturbance rejection purposes, [33], we assume for $\hat{P} \in \mathcal{B}(\sigma_o)^{n_o x n_i}$:

$$n_i \geq n_o \tag{5.14}$$

$$\text{rank}[\mathcal{N}_{p\ell}(s)] = n_o \qquad \forall\ s \in \sigma(A_w) \cup \sigma(A_s). \tag{5.15}$$

Let finally Λ be a <u>given</u> finite list of points of the vertical strip $[\sigma_o, 0)$ with the property that $\lambda \in \Lambda \Leftrightarrow \bar{\lambda} \in \Lambda$. (5.16)

We shall now discuss the

<u>Stabilization, Tracking and Disturbance Rejection Problem (STDP)</u>: For the given data (5.1)-(5.16) find a controller $\hat{C} \in \mathcal{B}(\sigma_o)^{n_i x n_o}$, corresponding to real valued distributions, such that the feedback system S, (3.1)-(3.8), (Fig. 3.1):

(i) is $\mathcal{A}$-stable;

(ii) $\mathcal{Z}[\hat{\chi}; \mathbb{C}_{\sigma_o+}]$ i.e., the list of zeros of $\hat{\chi}$ (the characteristic function of S defined by (3.15)) in $\mathbb{C}_{\sigma_o+}$ is exactly Λ;

(iii) $\forall\ x_s(0) \in \mathbb{R}^{n_s}$, $\forall\ x_w(0) \in \mathbb{R}^{n_w}$ the reference signals $u_s(\cdot)$ defined by (5.5) will be tracked asymptotically and the disturbances $w_p(\cdot)$ defined by (5.6) will be rejected asymptotically; more precisely, with Fig. 3.1 in mind: the system error $e_s(\cdot)$ generated by $(u_s(\cdot), w_p(\cdot))$ defined by (5.5) and (5.6) satisfies, for some $\sigma < 0$,

$$e_s(t) = o(e^{\sigma t}) \text{ as } t \to \infty$$

i.e.

$$\lim_{t\to\infty} e_s(t)/e^{\sigma t} = 0; \tag{5.17}$$

(iv) property (iii) is maintained for any perturbed plant $\hat{\bar{P}} \in \hat{\mathcal{B}}(\sigma_o)^{n_o x n_i}$ for which the feedback system S, (3.1)-(3.8), remains $\mathcal{A}$-stable.

Remarks. R5.1 $\hat{C}$ is required to be in $\hat{\mathcal{B}}(\sigma_o)^{n_i x n_o}$, hence $\hat{C}$ is bounded at infinity in $\mathbb{C}_{\sigma_o+}$. This corresponds to $\hat{C}$ being a proper rational matrix in the lumped case.

R5.2 Assumption (5.4) is satisfied by all realistic models of physical plants: it reflects the inertia-like properties of physical plants: it implies also that, for $\hat{C} \in \hat{\mathcal{B}}(\sigma_o)^{n_i x n_o}$, $\det[I_{n_o} + \hat{P}\hat{C}] = \det[I_{n_i} + \hat{C}\hat{P}] \to 1$ as as $|s| \to \infty$ in $\mathbb{C}_{\sigma_o+}$: hence, for any $\hat{C} \in \hat{\mathcal{B}}(\sigma_o)^{n_i x n_o}$, condition (3.8) will be satisfied and the input-error- and input-output transfer functions $\hat{H}_e$ and $\hat{H}_y$ of system S (see section 3) will belong to $\hat{\mathcal{B}}(\sigma_o)^{(n_i+n_o)x(n_i+n_o)}$

R5.3 According to the Theorem 3.1, condition (ii) of the (STDP) guarantees that simultaneously the input-error- and input-output transfer functions $\hat{H}_e$ and $\hat{H}_y$ of feedback system S (Fig. 3.1) will have a prescribed set of poles in $\mathbb{C}_{\sigma_o+}$ with specified MacMillan degrees namely the distinct points of Λ with their given multiplicities. Observe that in the lumped case a similar pole specification is done for all of $\mathbb{C}$. The intuitive idea here is to place the "dominant poles." Finally it should be stressed that we place here poles of $\hat{H}_e$ and $\hat{H}_y$ considered as matrix-valued functions: we cannot say which element of $\hat{H}_e$ and $\hat{H}_y$ will obtain a pole.

R5.4 Condition (iii) of the (STDP) will not only guarantee that feedback system S is a servomechanism: it, in fact, guarantees that the system error $e_s(\cdot)$ due to the reference and disturbance signals convergesto zero faster than $e^{\sigma t}$ as $t \to \infty$ for some $\sigma < 0$.

R5.5 Condition (iv) is a robustness property guaranteeing that as long as the feedback System S remains $\mathcal{A}$-stable then reference signals will be tracked and disturbances will be rejected asymptotically: see also [32, Theorem 3].

In order to solve the (STDP) we start by giving a preliminary definition and result.

For $\sigma \in \mathbb{R}$ consider the function space

$$L_{1,\sigma} = \{f\,;\, f:\mathbb{R}_+ \to \mathbb{C} \text{ s.t. } \int_0^\infty e^{-\sigma t}|f(t)|dt < \infty\} \tag{5.18}$$

<u>Lemma 5.1</u>. Let $\sigma < 0$. Let $g \in \mathcal{A}(\sigma)$. Let $u \in L_{1,\sigma}$ and $\dot{u} \in \mathcal{A}(\sigma)$. Then the convolution $y = g * u$ satisfies

$$y(t) = o(e^{\sigma t}) \text{ as } t \to \infty. \tag{5.19}$$

<u>Proof</u>. For any $f \in \mathcal{A}(\sigma)$, let f_σ be defined by $f_\sigma(t) := e^{-\sigma t}f(t)$. From $y = g * u$ and $\dot{y} = g * \dot{u}$, we obtain

$$y_\sigma = g_\sigma * u_\sigma \tag{5.20}$$

$$\dot{y}_\sigma = g_\sigma * \dot{u}_\sigma \tag{5.21}$$

Since g_σ and $\dot{u}_\sigma \in \mathcal{A}(0)$, $\dot{y}_\sigma \in \mathcal{A}(0)$, [7, App. D], hence $\int_t^\infty |\dot{y}_\sigma(t')|dt' \to 0$ as $t \to \infty$ and $y_\sigma(t) \to$ constant, say, b as $t \to \infty$. From (5.20), $y_\sigma \in L_{1,\sigma}$ since $u_\sigma \in L_1$. Consequently the constant $b = 0$; equivalently, $y_\sigma(t) \to 0$ as $t \to \infty$. Since $y(t) = e^{\sigma t}y_\sigma(t)$, (5.19) follows. ¤

We are now ready for the solution of the (STDP). We shall denote by $\mathcal{Z}[f;Q]$ the list of zeros of the function f in the set Q, and by $\mathcal{Z}[f]$ the list of zeros of f.

<u>Algorithm 5.1</u>.

<u>Data</u>: We are given the description of a plant $\hat{P}$, of reference- and disturbance-signals $(u_s(\cdot),w_p(\cdot))$, of the polynomial ϕ and the lists $\mathcal{Z}[\phi]$ and Λ: see (5.1)-(5.16).

<u>Step 1</u>. Pick

$$\begin{aligned} &d \text{ any monic polynomial in } \mathbb{R}[s] \text{ such that} \\ &\partial d = \partial\phi = q \text{ and } d(s) \neq 0 \text{ for all } s \in \mathbb{C}_{\sigma_o+}. \end{aligned} \tag{5.23}$$

Comment 1: Observe that

$$\frac{\phi}{d} \in \mathcal{R}^{\infty}(\sigma_o) \subset \hat{\mathcal{A}}_-^{\infty}(\sigma_o) \text{ with real coefficients,} \tag{5.24}$$

$$\mathcal{Z}[\tfrac{\phi}{d}] = \mathcal{Z}[\phi] \text{ with } \lambda \in \mathcal{Z}[\tfrac{\phi}{d}] \text{ iff } \bar{\lambda} \in \mathcal{Z}[\tfrac{\phi}{d}]. \tag{5.25}$$

Step 2. Pick

$$\begin{aligned} &\mathcal{D} \in \hat{\mathcal{A}}_-(\sigma_o)^{n_o x n_o}, \text{ corresponding to real valued distributions,} \\ &\text{such that } \det \mathcal{D} \in \hat{\mathcal{A}}_-^{\infty}(\sigma_o) \text{ and } \mathcal{Z}[\det \mathcal{D}; \mathbb{C}_{\sigma_o+}] = \Lambda. \end{aligned} \tag{5.26}$$

Comment 2: The conditions for $\mathcal{D}$ can be met by choosing $\mathcal{D} \in \mathcal{R}(\sigma_o)^{n_o x n_o}$ corresponding to real-valued distributions.

Step 3. Observe that

$$\begin{aligned} &\hat{F} = \hat{P}\frac{d}{\phi} \in \hat{\mathcal{B}}(\sigma_o)^{n_o x n_i} \text{ with } \sigma_o - \ell.r.(\mathcal{O}_\ell, \mathcal{N}_\ell) := (\mathcal{O}_{p\ell}\tfrac{\phi}{d}, \mathcal{N}_{p\ell}) \\ &\text{corresponding to real-valued distributions,} \end{aligned} \tag{5.27}$$

and find, using the technique of Corollary 2.4ℓ,

$$\left.\begin{aligned} &\text{six matrices with elements in } \hat{\mathcal{A}}_-(\sigma_o) \text{ corresponding to} \\ &\text{real valued distributions, namely} \\ &\mathcal{U}_\ell, \mathcal{V}_\ell; \mathcal{N}_r, \mathcal{O}_r, \mathcal{U}_r, \mathcal{V}_r \end{aligned}\right\} \tag{5.28}$$

such that:

i)

$$\begin{array}{c} \\ n_i \\ n_o \end{array} \begin{array}{c} \begin{array}{cc} n_i & n_o \end{array} \\ \left[\begin{array}{c|c} \mathcal{V}_r & \mathcal{U}_r \\ \hline -\mathcal{N}_\ell & \mathcal{O}_\ell \end{array}\right] \end{array} \begin{array}{c} \begin{array}{cc} n_i & n_o \end{array} \\ \left[\begin{array}{c|c} \mathcal{O}_r & -\mathcal{U}_\ell \\ \hline \mathcal{N}_r & \mathcal{V}_\ell \end{array}\right] \end{array} \begin{array}{c} \\ n_i \\ n_o \end{array} = \left[\begin{array}{c|c} I_{n_i} & 0 \\ \hline 0 & I_{n_o} \end{array}\right] \tag{5.29}$$

where if we call the matrices on the left hand side of (5.23) $\mathcal{W}$ respectively $\mathcal{W}^{-1}$, then obviously $\mathcal{W}$ is an invertible element of $\hat{\mathcal{A}}_-(\sigma_o)^{(n_i+n_o)x(n_i+n_o)}$ and without loss of generality we can scale it so that

$$\det \mathcal{W} = \det[\mathcal{W}^{-1}] \equiv 1\,; \tag{5.29a}$$

ii)

$$(\mathcal{N}_r, \mathcal{D}_r) \text{ is a } \sigma_o\text{-}\ell.\text{r. of } \hat{F}. \tag{5.30}$$

Comments 3: In (5.28) elements in $\hat{\mathcal{A}}_-(\sigma_o)$ corresponding to real-valued distributions are obtained by grouping complex conjugate poles and corresponding residues.

Step 4. Observe

$$\hat{F} \text{ in (5.27) satisfies } \hat{F}(s) \to 0_{n_o x n_i} \text{ as } |s| \to \infty \text{ in } \mathbb{C}_{\sigma_o+} \tag{5.31}$$

and, using (5.26)-(5.31), solve (COMP), defined by (4.2)-(4.3), as follows:

i) Pick $\mathcal{N} \in \hat{\mathcal{A}}_-(\sigma_o)^{n_i x n_o}$ corresponding to real-valued distributions in the class

$$\{\mathcal{N} \in \hat{\mathcal{A}}_-(\sigma_o)^{n_i x n_o} : (\mathcal{N}, \mathcal{D}) \text{ is an } n_i x n_o\ \sigma_o\text{-r.r.}\} \tag{5.32}$$

ii) Set $-\mathcal{X} := \mathcal{D}_r \mathcal{N} - \mathcal{U}_\ell \mathcal{D}$; $\mathcal{Y} := \mathcal{N}_r \mathcal{N} + \mathcal{V}_\ell \mathcal{D}$. (5.33)

Comment 4: (i) the choice (5.32) is equivalent (by Corollary 2.2), to picking $\mathcal{N} \in \hat{\mathcal{A}}_-(\sigma_o)^{n_i x n_o}$ corresponding to real valued distributions such that

$$\text{rank} \begin{array}{c} \\ n_i \\ n_o \end{array} \begin{array}{c} n_o \\ \left[\begin{array}{c} \mathcal{N}(s) \\ \hline \mathcal{D}(s) \end{array}\right] \end{array} = n_o \quad \text{for all } s \in \Lambda. \tag{5.34}$$

(ii) $(\mathcal{X}, \mathcal{Y})$ as given by (5.33) is an $n_i x n_o$ σ_o-r.r. corresponding to real valued distributions. (5.35)

(iii) Using (5.29) one has also by (5.33):

$$\mathcal{N} = -\mathcal{V}_r \mathcal{X} + \mathcal{U}_r \mathcal{Y}; \quad \mathcal{D} = \mathcal{N}_\ell \mathcal{X} + \mathcal{D}_\ell \mathcal{Y}. \tag{5.36}$$

Step 5. Set

$$\mathcal{N}_{cr} := \mathcal{X}, \mathcal{D}_{cr} := \mathcal{Y}\frac{\phi}{d} , \tag{5.37}$$

$$\hat{C} := \mathcal{N}_{cr}\mathcal{D}_{cr}^{-1} , \tag{5.38}$$

and STOP.

Comment 5: (i)

$$\hat{C} \in \hat{\mathcal{B}}(\sigma_o)^{n_i x n_o} \text{ with } \sigma_o - \text{r.r. } (\mathcal{N}_{cr}, \mathcal{D}_{cr}) \text{ corresponding to real valued distributions} \tag{5.39}$$

(ii) $\hat{C}$ solves the (STDP). ¤ (5.40)

Theorem 5.1. Consider Algorithm 5.1. The $\hat{C}$, as given by (5.38), belongs to $\hat{\mathcal{B}}(\sigma_o)^{n_i x n_o}$ with σ_o - r.r.$(\mathcal{N}_{cr}, \mathcal{D}_{cr})$ and solves the (STDP).

Proof: We shall show that algorithm 5.1 works.

Step 1 and Step 2: These steps are self explanatory.

Step 3. Because of Corollary 2.4ℓ we only need to show (5.27). Since by (5.24), $\frac{d}{\phi} \in \hat{\mathcal{B}}(\sigma_o)$ and since $\hat{P} \in \hat{\mathcal{B}}(\sigma_o)^{n_o x n_i}$ it follows that $\hat{F} = \hat{P}\frac{d}{\phi} \in \hat{\mathcal{B}}(\sigma_o)^{n_o x n_i}$.

Moreover $(\mathcal{D}_{p\ell d}\frac{\phi}{}, \mathcal{N}_{p\ell})$ is a σ_o - ℓ.r. of $\hat{P}\frac{d}{\phi}$. Indeed $\hat{P}\frac{d}{\phi} = (\mathcal{D}_{p\ell d}\frac{\phi}{})^{-1}\mathcal{N}_{p\ell}$ and by

(5.2), (5.8)-(5.15) $\det \mathcal{D}_{p\ell d}\frac{\phi}{} \in \hat{\mathcal{A}}_{-}^{\infty}(\sigma_o)$ and $\text{rank}[\mathcal{D}_{p\ell}(s)\frac{\phi(s)}{d(s)} \vdots \mathcal{N}_{p\ell}(s)] = n_o$ for

for all $s \in \mathbb{C}_{\sigma_o+}$, i.e. by Corollary 2.2 $(\mathcal{D}_{p\ell d}\frac{\phi}{}, \mathcal{N}_{p_\ell})$ is σ_o - ℓ.c..

Step 4. Because of Theorem 4.1 and Corollary 2.2, we need only to show (5.31). Now observe that this follows from (5.24), (5.27) and (5.4).

Step 5. a) (5.39) is true by the fact that $(\mathcal{X}, \mathcal{Y}\frac{\phi}{d})$ is an $n_i x n_o$ σ_o - r.r.. Indeed observe that the equation describing (COMP) is given by

$$\mathcal{D} = \mathcal{N}_\ell \mathcal{X} + \mathcal{D}_\ell \mathcal{Y} = \mathcal{N}_{p\ell} \mathcal{X} + \frac{\phi}{d} \mathcal{D}_{p\ell} \mathcal{Y}$$

where we used (5.27) and where by (5.25) and (5.10)-(5.11) $\mathcal{D}(s) = \mathcal{N}_{p\ell}(s)\mathcal{X}(s)$ $\forall s \in \sigma(A_s) \cup \sigma(A_w)$. Therefore by (5.7), (5.26), (5.16), (5.14), (5.15), $\text{rank}[\mathcal{X}(s)] = n_o$, $\forall\ s \in \sigma(A_s) \cup \sigma(A_w)$. Hence this and (5.35) imply that

$$\text{rank} \begin{array}{c} \\ n_i \\ \\ n_o \end{array} \begin{array}{c} n_o \\ \begin{bmatrix} \mathcal{X}(s) \\ \\ \mathcal{Y}(s)\,\frac{\phi(s)}{d(s)} \end{bmatrix} \end{array} = n_o \qquad \forall\ s \in \mathbb{C}_{\sigma_o+}.$$

Now (5.35) and (5.24) imply that $\det[\mathcal{Y}\frac{\phi}{d}] \in \hat{\mathcal{A}}^\infty_-(\sigma_o)$, and hence by Corollary 2.2 the pair $(\mathcal{X}, \mathcal{Y}\frac{\phi}{d})$ is σ_o - r.c.

b) We show now that (5.40) is true.

i) First for the feedback system S (3.1)-(3.8) (Fig. 3.1), (where the plant transfer function $\hat{P}$ is is given by (5.1)-(5.4) and (5.14)-(5.15), and where the controller transfer function satisfies (5.37)-(5.39)), the transfer functions $\hat{H}_e$ and $\hat{H}_y$ are well defined and have elements in $\hat{\mathcal{B}}(\sigma_o)$ (see Remark R5.2).

ii) The equation (4.1) of (COMP) reads here:

$$\mathcal{D} = \mathcal{N}_\ell \mathcal{X} + \mathcal{D}_\ell \mathcal{Y} = \mathcal{N}_{p\ell} \mathcal{N}_{cr} + \mathcal{D}_{p\ell} \mathcal{D}_{cr}, \tag{5.41}$$

where we used (5.27) and (5.37). Hence the characteristic function (3.15) of S satisfies here:

$$\hat{\chi} = \det \mathcal{D}\,, \tag{5.42}$$

such that by using (5.26):

$$\mathcal{Z}[\hat{\chi};\mathbb{C}_{\sigma_o+}] = \mathcal{Z}[\det \mathcal{D};\mathbb{C}_{\sigma_o+}] = \Lambda. \tag{5.43}$$

Hence also by (5.16):

$$\hat{\chi}(s) \neq 0 \qquad \forall\ s \in \mathbb{C}_+. \tag{5.44}$$

It follows that by (5.43) property (ii) of the (STDP) is verified, while property (i) follows from (5.44) and Theorem 3.1.

iii) We shall now show that the tracking property (iii) of the (STDP) holds.

If $\hat{H}_{e_s,u_s}$ resp. $\hat{H}_{e_s,w_p}$ denote transfer functions of System S (Fig. 3.1) defined by:

$$\hat{H}_{e_s,u_s} : \hat{u}_s \mapsto \hat{e}_s \text{ with } \hat{w}_p \equiv 0 \ , \tag{5.45}$$

$$\hat{H}_{e_s,w_p} : \hat{w}_p \mapsto \hat{e}_s \text{ with } \hat{u}_s \equiv 0 \ , \tag{5.46}$$

then using (5.2), (5.39), (5.37), (5.41),

$$\hat{H}_{e_s,u_s} = [I+\hat{P}\hat{C}]^{-1} = \mathcal{D}_{cr}[\mathcal{D}_{p\ell}\mathcal{D}_{cr}+\mathcal{N}_{p\ell}\mathcal{N}_{cr}]^{-1}\mathcal{D}_{p\ell} = \frac{\phi}{d}\mathcal{Y}\mathcal{D}^{-1}\mathcal{D}_{p\ell} \tag{5.47}$$

$$\hat{H}_{e_s,w_p} = -\ [I+\hat{P}\hat{C}]^{-1}\hat{P} = -\mathcal{D}_{cr}[\mathcal{D}_{p\ell}\mathcal{D}_{cr} + \mathcal{N}_{p\ell}\mathcal{N}_{cr}]^{-1}\mathcal{N}_{p\ell} = -\frac{\phi}{d}\mathcal{Y}\mathcal{D}^{-1}\mathcal{N}_{p\ell} \tag{5.48}$$

Observe now that by (5.26) and [7, Appendix D], $\det \mathcal{D}^{-1}$ belongs to $\hat{\mathcal{A}}(\sigma)^{n_o \times n_o}$ for some $\sigma \in (\sigma_o, 0)$. Now, since $\hat{\mathcal{A}}_-(\sigma_o) \subset \hat{\mathcal{A}}(\sigma)$, it follows therefore, by (5.2) and since $\mathcal{Y} \in \hat{\mathcal{A}}_-(\sigma_o)^{n_o \times n_o}$, that

$$\mathcal{Y}\mathcal{D}^{-1}\mathcal{D}_{p\ell} \in \hat{\mathcal{A}}(\sigma)^{n_o \times n_o}, \tag{5.49}$$

$$-\mathcal{Y}\mathcal{D}^{-1}\mathcal{N}_{p\ell} \in \hat{\mathcal{A}}(\sigma)^{n_o \times n_i}. \tag{5.50}$$

Furthermore by (5.5)-(5.13) and (5.23):

$$\left.\begin{array}{l} \forall\, x_s(0),\ \mathcal{L}^{-1}[\frac{\phi}{d}C_s(sI-A_s)^{-1}\ x_s(0)] \in L_{1,\sigma}^{n_o} \\ \text{and its derivative belongs to } \mathcal{A}(\sigma)^{n_o}, \end{array}\right\} \tag{5.51}$$

$$\left.\begin{array}{l} \forall\, x_w(0),\ \mathcal{L}^{-1}[\frac{\phi}{d}C_w(sI-A_w)^{-1}\ x_w(0)] \in L_{1,\sigma}^{n_i} \\ \text{and its derivative belongs to } \mathcal{A}(\sigma)^{n_i}. \end{array}\right\} \tag{5.52}$$

Consider now the system error $\hat{e}_s$ due to $(\hat{u}_s,\hat{w}_p)$ given by (5.5)-(5.7), then $\forall\, x_s(0)$, $\forall\, x_w(0)$

$$\hat{e}_s = \hat{H}_{e_s,u_s}\hat{u}_s + \hat{H}_{e_s,w_p}\hat{w}_p$$

$$= [\mathcal{Y}\mathcal{D}^{-1}\mathcal{D}_{p\ell}][\frac{\phi}{d}\ C_s(sI-A_s)^{-1}\ x(0)] + [-\mathcal{Y}\mathcal{D}^{-1}\mathcal{N}_{p\ell}][\frac{\phi}{d}\ C_w[sI-A_w)^{-1}x_w(0)] \tag{5.53}$$

when we used (5.45)-(5.46), (5.47)-(5.48), (5.5)-(5.6).

Therefore by (5.49)-(5.53) and Lemma 5.1

$\forall\, x_s(0)$, $\forall\, x_w(0)$, $e_s(t) = o(e^{\sigma t})$ as $t \to \infty$. Q.E.D.

iv) Property (iv) of the (STDP) is shown to be true as follows.

Let $\hat{\bar{P}} \in \hat{\mathcal{B}}(\sigma_o)^{n_o x n_i}$ be any perturbed plant for which the feedback system S (3.1)-(3.8) remains $\mathcal{A}$-stable. By Theorem 2.1 $\hat{\bar{P}}$ admits σ_o - ℓ.r.$(\bar{\mathcal{D}}_{p\ell},\bar{\mathcal{N}}_{p\ell})$ and the characteristic function $\hat{\chi}$ (3.15) becomes

$$\hat{\bar{\chi}} = \det \mathcal{D}\ ,$$

where

$$\bar{\mathcal{D}} = \bar{\mathcal{D}}_{p\ell}\mathcal{D}_{cr} + \bar{\mathcal{N}}_{p\ell}\mathcal{N}_{cr} \in \hat{\mathcal{A}}_-(\sigma_o)^{n_o x n_o}.$$

Moreover (3.8) and (3.20) read now respectively :

$\det[I_{n_o} + \hat{\bar{P}}\hat{C}]$ is bounded away from zero at infinity in $\mathbb{C}_{\sigma_o+}$,

$\hat{\bar{\chi}} = \det[I_{n_o} + \hat{\bar{P}}\hat{C}] \det \mathcal{D}_{cr} \det \bar{\mathcal{D}}_{p\ell}$.

It follows that $\hat{\bar{\chi}}$ is bounded away from zero at infinity in $\mathbb{C}_{\sigma_o+}$ and by $\mathcal{A}$-stability and Theorem 3.1 $\hat{\bar{\chi}}(s) \neq 0$ for all s in $\mathbb{C}_+$. In fact more is true: since $\hat{\bar{\chi}}$ can only have a finite number of zeros in the strip $[\sigma_o, 0)$, it follows that $\exists\ \bar{\sigma} \in [\sigma_o, 0)$ such that $\hat{\bar{\chi}}(s) \neq 0\ \forall\ s \in \mathbb{C}_{\bar{\sigma}+}$. Hence $\hat{\bar{\chi}}$, i.e. $\det \bar{\mathcal{D}}$ is bounded away from zero in $\mathbb{C}_{\bar{\sigma}+}$, $\bar{\sigma} < 0$: this implies, [7, Appendix D], that $\bar{\mathcal{D}}^{-1}$ belongs to $\hat{\mathcal{A}}(\bar{\sigma})^{n_o \times n_o}$, (observe also that $\hat{\mathcal{A}}_-(\sigma_o) \subset \hat{\mathcal{A}}(\bar{\sigma})$ such that $\bar{\mathcal{D}} \in \hat{\mathcal{A}}(\bar{\sigma})^{n_o \times n_o}$). Observe now that the transfer functions in (5.47) and (5.48) read

$$\hat{\bar{H}}_{e_s,u_s} = \frac{\phi}{d}\, y\bar{\mathcal{D}}^{-1}\bar{\mathcal{D}}_{p\ell} \quad \text{and} \quad \hat{\bar{H}}_{e_s,w_p} = -\frac{\phi}{d}\, y\bar{\mathcal{D}}^{-1}\bar{\eta}_{p\ell}$$

where $y\bar{\mathcal{D}}^{-1}\bar{\mathcal{D}}_{p\ell} \in \hat{\mathcal{A}}(\bar{\sigma})^{n_o \times n_o}$ and $y\bar{\mathcal{D}}^{-1}\bar{\eta}_{p\ell} \in \hat{\mathcal{A}}(\bar{\sigma})^{n_o \times n_i}$; and $\bar{\sigma} \in [\sigma_o, 0)$.

The reasoning of (ii) can now be repeated to show that $\forall\ x_s(0)$, $\forall\ x_w(0)$, $e_s(t) = o(e^{\bar{\sigma}t})$ as $t \to \infty$ with $\bar{\sigma} \in [\sigma_o, 0)$. Hence property (iii) of the (STDP) is maintained. ¤

Appendix 1: $\mathcal{R}(\sigma_o)$ is a Euclidean Ring

Recall that a principal ideal ring R, [12], is called a Euclidean ring, [8], if the following properties hold:

1. Associated with every nonzero element of R is nonnegative number $\gamma(a)$ called the gauge of a;†

2. For every pair a, b of R, $b \neq 0$ there exist two elements r and q of R such that $a = bq + r$ and either $r = 0$ or else $\gamma(r) < \gamma(b)$.

Recall that $\mathcal{R}(\sigma_o)$ is a principal ideal ring, [9], and that the following fact holds.

Fact A1. Let $a \in \mathcal{R}(\sigma_o)$, let $\pi(s) = s - \sigma_o + 1$, then

$$a = e_a n_{a+}/\pi^{\gamma(a)} \tag{A1.1}$$

where e_a is an invertible element of $\mathcal{R}(\sigma_o)$,

n_{a+} is a polynomial which is zero at all zeros of a in $\mathbb{C}_{\sigma_o+}$ and nowhere else,

$\gamma(a)$ = number of zeros of a in $\mathbb{C}_{\sigma_0+}$ and at infinity. (A1.2)

Comment: If a is invertible in $\mathcal{R}(\sigma_o)$, then $\gamma(a) = 0$.

Proof: $a = n_a/d_a$ where n_a and d_a are coprime polynomials. Factorizing $n_a = n_{a+}n_{a-}$ where n_{a+} (respectively n_{a-}) takes into account the zeros of a in $\mathbb{C}_{\sigma_o+}$ (respectively $\mathring{\mathbb{C}}_{\sigma_o-}$), and observing that $d_a = d_{a-}$ and $\gamma(a) = \partial(n_{a+}) + \partial(d_a) - \partial(n_a) = \partial(d_a) - \partial(n_{a-})$, we get $a = e_a n_{a+}/\pi^{\gamma(a)}$ with

$$e_a = \pi^{\gamma(a)} n_{a-}/d_a. \tag{A1.3}$$

---

†We use Sigler's term "gauge," [36], instead of MacDuffee's "stathm," [8]: "degree" could also have been used but would be misleading since we handle polynomials at the same time.

Observe that e_a is invertible in $\mathcal{R}(\sigma_o)$. ¤

We are now able to define a Euclid Algorithm for $\mathcal{R}(\sigma_o)$ <u>with the gauge defined by (A1.2)</u>.

<u>Euclid Algorithm for $\mathcal{R}(\sigma_o)$</u>: Given a and b in $\mathcal{R}(\sigma_o)$, $b \neq 0$, find $r \in \mathcal{R}(\sigma_o)$ and $q \in \mathcal{R}(\sigma_o)$ such that

$$a = bq + r \text{ where } r = 0 \text{ or } \gamma(r) < \gamma(b).$$

<u>Step 1</u>. If $\gamma(b) \leq \gamma(a)$ go to step 2, else

$$a = b0 + a$$

i.e. $r = a, q = 0$ and $\gamma(r) = \gamma(a) < \gamma(b)$.

Stop.

<u>Step 2</u>. Apply Fact A1.1 to a and b, i.e.

$$a = e_a n_{a+}/\pi^{\gamma(a)}, \qquad b = e_b n_{b+}/\gamma^{\pi(b)} . \tag{A1.4}$$

<u>Step 3</u>. Develop $n_{a+}/\pi^{\gamma(a)}$ and $n_{b+}/\pi^{\gamma(b)}$ as polynomials in $w := \pi^{-1} = (s-\sigma_o+1)^{-1}$, i.e.

$$\left(\frac{n_{a+}}{\pi^{\gamma(a)}}\right)(w) = \sum_{k=0}^{\partial(n_{a+})} n_{a+}^k w^{\gamma(a)-k} \qquad \text{where } n_{a+}^k \in \mathbb{C},$$

$$\left(\frac{n_{b+}}{\pi^{\gamma(b)}}\right)(w) = \sum_{\ell=0}^{\partial(n_{b+})} n_{b+}^\ell w^{\gamma(b)-\ell} \qquad \text{where } n_{b+}^k \in \mathbb{C},$$

and observe <u>that the degree in w of these polynomials is the gauge of a and b resp.</u>.

<u>Step 4</u>. Divide the polynomial $\left(\frac{n_{a+}}{\pi^{\gamma(a)}}\right)(w)$ by the polynomial $\left(\frac{n_{b+}}{\pi^{\gamma(b)}}\right)(w)$:

then there exist polynomials $x(w)$ and $y(w)$ such that

$$\left(\frac{n_{a+}}{\pi^{\gamma(a)}}\right)(w) = \left(\frac{n_{b+}}{\pi^{\gamma(b)}}\right)(w)x(w) + y(w) \tag{A1.5}$$

with either $y = 0$ or $\partial(y(w)) < \partial\left(\left(\frac{n_{b+}}{\pi^{\gamma(b)}}\right)(w)\right) = \gamma(b)$. (A1.6)

<u>Step 5</u>. Reintroduce the invertible elements e_a and e_b of (A1.4) to obtain

$$a = bq + r$$

where $q(s) = \frac{e_a(s)}{e_b(s)} \times \left(\frac{1}{s-\sigma_o+1}\right)$, (A1.7)

$$r(s) = e_a(s)\ y\left(\frac{1}{s-\sigma_o+1}\right) , \tag{A1.8}$$

and observe that either $r = 0$ or $\gamma(r) < \gamma(b)$. (A1.9)

Stop. ¤

<u>Justification of the Euclid Algorithm</u>

We check the result of Step 5.

Observe that q and r as given by (A1.7)-(A1.8) are $\mathcal{R}(\sigma_o)$. Hence we must show that if $r \neq 0$ then $\gamma(r) < \gamma(b)$.

Observe now that by (A1.2) $\forall\ a, b \in \mathcal{R}(\sigma_o)$, $a \neq 0$, $b \neq 0$, $\gamma(ab) = \gamma(a) + \gamma(b)$. Hence by (A1.8), with $\gamma(e_a) = 0$ we get $\gamma(r) = \gamma\left(y\left(\frac{1}{s-\sigma_o+1}\right)\right)$. Hence, in view of (A1.6), if we can show that

$$\gamma(y) = \gamma\left(y\left(\frac{1}{s-\sigma_o+1}\right)\right) \leq \partial(y(w))$$

then we are done.

Now $y \in \mathcal{R}(\sigma_o)$, so we get by Fact A1.1

$$y = e_y n_{y+}/\pi^{\gamma(y)}.$$

Also by Step 4, with $w = \pi^{-1}$, we get

$$y = n_y/\pi^{\partial(y(w))},$$

with n_y and $\pi^{\partial(y(w))}$ coprime polynomials in s. Hence similarly as in the proof of Fact A1.1,

$$y = \frac{n_{y-} \cdot n_{y+}}{\pi^{\partial(y(w))}} = \left(\frac{n_{y-}}{\pi^{\partial(n_{y-})}}\right) \cdot \left(\frac{n_{y+}}{\pi^{\partial(y(w))-\partial(n_{y-})}}\right)$$

gives $e_y = n_{y-}/\pi^{\partial(n_{y-})}$ and $\gamma(y) = \partial(y(w)) - \partial(n_{y-})$.

Now $\partial(n_{y-}) \geq 0$, so we have $\gamma(y) \leq \partial(y(w))$ Q.E.D. ¤

Hence by the above we established

<u>Theorem A1.1</u>: $\mathcal{R}(\sigma_o)$ is a Euclidean Ring with gauge given by (A1.2).

<u>Final Comment</u>: Our sources of inspiration here were [8], [9], [10], [36], [37].

Appendix 2: Proof of Assertion (5.13)

The proof of (5.13) is based on the following consideration.

Consider the class of transfer function vectors

$$C(sI-A)^{-1}x \in \mathbb{R}^p(s) \tag{A2.1}$$

where

i) x is any element of $\mathbb{R}^n$ (A2.2)

ii) $A \in \mathbb{R}^{n\times n}$, $\quad C \in \mathbb{R}^{p\times n}$ (A2.3)

iii) (C,A) is a completely observable pair

i.e.,

$$\text{rank} \begin{bmatrix} C \\ \hline sI-A \end{bmatrix} = n \qquad \forall\, s \in \mathbb{C}. \tag{A2.4}$$

We have then the following theorem

Theorem A2.1: Let ψ be the† least common multiple (ℓ.c.m.) of the least common denominators (ℓ.c.d.'s) of all elements of the class of transfer function vectors $\{C(sI-A)^{-1}x;\ x \in \mathbb{R}^n\}$ defined by (A2.1)-(A2.4). Let ψ_A be the minimal polynomial of $A \in \mathbb{R}^{n\times n}$. Then

$$\psi = \psi_A \tag{A2.5}$$

Proof: 1) According to Gantmacher, [19], ψ_A is the invariant polynomial of highest degree of A. Indeed let Δ_i denote the greatest common divisor (g.c.d.) of the minors of order i of A and consider the ordered set

$$(\Delta_1, \Delta_2, \ldots, \Delta_n)$$

then we define the invariant polynomials of A as

†"The" ℓ.c.m. means the monic ℓ.c.m.; similarly "the" ℓ.c.d. means the monic ℓ.c.d.

$$\psi_i = \Delta_i/\Delta_{i-1} \quad i = 1,\ldots,n \quad \Delta_o := 1. \tag{A2.6}$$

Hence we get the ordered set of invariant polynomials

$$(\psi_1,\psi_2,\ldots,\psi_n) \tag{A2.7}$$

where ψ_i divides ψ_{i+1}, $i = 1,2,\ldots,n-1$, and $\psi_n = \psi_A$. (A2.8)

Moreover there exist nonsingular matrices $P \in \mathbb{R}^{n\times n}$ and $Q \in \mathbb{R}^{n\times n}$ such that

$$P(sI-A)Q = S(s) = \mathrm{diag}[\psi_1(s),\psi_2(s),\ldots,\psi_n(s)]; \tag{A2.9}$$

where $S(\cdot)$ is called the <u>Smith form of (sI-A)</u>.

Since, by (A2.6) and (A2.8) $\psi_A = \psi_n = \Delta_n/\Delta_{n-1}$, it follows

$$\psi_A = \psi_n \text{ is the } \ell.c.d. \text{ of the elements of } (sI-A)^{-1} \in \mathbb{R}(s)^{n\times n} \tag{A2.10}$$

2) Consider now for any $x \in \mathbb{R}^n$

$$C(sI-A)^{-1}x \in \mathbb{R}^p(s)$$

and denote the i-th component of this vector by

$$(C(sI-A)^{-1}x)_i.$$

Then

$$(C(sI-A)^{-1}x)_i = n_{xi}/d_{xi} \in \mathbb{R}(s) \text{ for } i = 1,\ldots,p, \tag{A2.11}$$

where

$$n_{xi} \text{ and } d_{xi} \text{ are coprime polynomials} \tag{A2.12}$$

and without loss of generality we take the convention

$$n_{xi} \equiv 0 \Rightarrow d_{xi} \equiv 1. \tag{A2.13}$$

Hence, if ψ_x denotes the ℓ.c.d. of $C(sI-A)^{-1}x$, then with this convention

$$\psi_x = \ell.c.m.\{d_{xi}\}_{i=1}^{p} \tag{A2.14}$$

such that ψ, the ℓ.c.m. of the ℓ.c.d.'s of all elements of $\{C(sI-A)^{-1}x;$ $x \in \mathbb{R}^n\}$ satisfies

$$\psi = \ell.c.m.\{\psi_x;\ x \in \mathbb{R}^n\}$$

$$= \ell.c.m.\{\ell.c.m.\{d_{xi}\}_{i=1}^{p};\ x \in \mathbb{R}^n\}. \tag{A2.15}$$

3) Apply now transformation (A2.9) to $C(sI-A)^{-1}x$. Then

$$C(sI-A)^{-1}x = CQS(s)^{-1}Px = \overline{C}S(s)^{-1}\overline{x} = \overline{G}(s)\overline{x}$$

where

$$\overline{C} = CQ, \tag{A2.16}$$

$$\overline{x} = Px \quad \text{is any vector in } \mathbb{R}^n \tag{A2.17}$$

Hence also

$$\text{for } i = 1,\ldots,p \text{ and for } j = 1,\ldots,n \quad \overline{g}_{ij} = \overline{c}_{ij}\psi_j^{-1}$$

and

$$\text{for } i = 1,2,\ldots,p \quad (C(sI-A)^{-1}x)_i = \sum_{j=1}^{n} \overline{c}_{ij}\psi_j^{-1}\overline{x}_j = n_{xi}/d_{xi} \tag{A2.18}$$

where we used also (A2.11)-(A2.13).

Hence by using (A2.8) and (A2.11)-(A2.15) we have always the following equivalent facts

$$\forall\, x \in \mathbb{R}^n,\ \forall\, i = 1,\ldots,p,\ d_{xi} \text{ is a divisor of } \psi_n = \psi_A$$

$\Longleftrightarrow$

$$\forall\, x \in \mathbb{R}^n, \quad \psi_x \text{ is a divisor of } \psi_n = \psi_A$$

$$\Longleftrightarrow$$

$$\psi \text{ is a divisor of } \psi_A . \tag{A2.19}$$

Hence the claim of the theorem is equivalent to

$$\psi_A \text{ is a divisor of } \psi. \tag{A2.20}$$

4) Suppose now that (A2.20) is not true, then

$$\psi \text{ is a proper divisor of } \psi_A$$

hence also

$$\forall\, x \in \mathbb{R}^n \quad \psi \text{ is a proper divisor of } \psi_A = \psi_n$$

and

$$\forall\, x \in \mathbb{R}^n \quad \forall\, i = 1,2,\ldots,p \quad d_{xi} \text{ is a proper divisor of } \psi_A = \psi_n. \tag{A2.21}$$

Pick now $x \in \mathbb{R}^n$ such that $\bar{x} = Px = (0,0,\ldots,0,1)'$. Then using (A2.18)

$$\forall\, i = 1,2,\ldots,p \quad (C(sI-A)^{-1}x)_i = \bar{c}_{in}\psi_n^{-1} = n_{xi}/d_{xi}$$

which by conventions (A2.12)-(A2.13) implies

$$\forall\, i = 1,2.,,,.p \quad \text{either} \quad n_{xi} \equiv \bar{c}_{in} \neq 0 \quad \text{and} \quad d_{xi} = \psi_n = \psi_A$$

$$\text{or} \quad n_{xi} \equiv \bar{c}_{in} = 0 \quad \text{and} \quad d_{xi} \equiv 1.$$

It follows therefore by (A2.21)

$$\forall\, i = 1,2,\ldots,p \quad \bar{c}_{in} = 0$$

i.e. the <u>n-th column of $\bar{C}$ is zero</u>.

Using transformation (A2.9) it follows now easily that

$$\left[\begin{array}{c|c} I_p & 0 \\ \hline 0 & P \end{array}\right] \left[\begin{array}{c} C \\ \hline sI-A \end{array}\right] Q = \left[\begin{array}{c} \overline{C} \\ \hline \mathrm{diag}[\psi_1, \psi_2, \ldots, \psi_n] \end{array}\right]$$

where $\psi_n(s) = \psi_A(s) = 0 \quad \forall\, s \in \sigma(A)$, the spectrum of A.

Hence combining the above we obtain

$$\mathrm{rank} \left[\begin{array}{c} C \\ \hline sI-A \end{array}\right] < n \qquad \forall\, s \in \sigma(A).$$

This contradicts (A2.4). Hence the hypothesis that (A2.20) is not true is false: (A2.20) is true and so by (A2.19), (A2.5) is true. ¤

The following is now an immediate consequence of Theorem A2.1.

<u>Theorem A2.2</u>: Consider descriptions (5.5) and (5.6) and let ϕ be the ℓ.c.m. of the minimal polynomials ψ_{A_w} and ψ_{A_s} described by (5.8)-(5.12). Under these conditions ϕ is the ℓ.c.m. of the ℓ.c.d.'s of all elements of the class of transfer function vectors $\{C_s(sI-A_s)^{-1}x_s(0),\ x_s(0) \in \mathbb{R}^{n_s}\} \cup \{C_w(sI-A_w)^{-1}x_w(0);\ x_w(0) \in \mathbb{R}^{n_w}\}$. ¤

It is now seen that assertion (5.13) is an immediate consequence of Theorem A2.2. ¤

List of References

[1] F. M. Callier and C. A. Desoer, "An Algebra of Transfer Function of Transfer Functions of Distributed Linear Time-Invariant Systems," IEEE Trans. on Circuits and Systems, Vol. CAS-25, no. 9, pp. 651-662, September 1978.

[2] F. M. Callier and C. A. Desoer "Simplifications and New Connections on An Algebra of Transfer Functions of Distributed Linear Time-Invariant Systems," submitted IEEE Trans. on Circuits and Systems, Nov. 1978.

[3] D. C. Youla et al., "Modern Wiener Hopf Design of Optimal Controllers, part II, The Multivariable Case," IEEE Trans. on Automatic Control, Vol. AC-21, no. 3., pp. 319-338, June 1976.

[4] J. J. Bongiorno and D. C. Youla," On the Design of Single-Loop Single-Input-Output Feedback Control Systems in the Complex Frequency Domain," IEEE Trans. on Automatic Control, Vol. AC-22, no. 3, pp. 416-423, June 1977.

[5] E. Hille and R. S. Phillips, "Functional Analysis and Semi-Groups," American Mathematical Society Colloquium Publications, Vol. XXXI, American Mathematical Society," Providence, Rhode Island, esp. pp. 141-150.

[6] O. Zariski and P. Samuel, "Commutative Algebra," Vol. I, Van Nostrand, New York, 1958.

[7] C. A. Desoer and M. Vidyasagar, Feedback Systems: Input-Output Properties," Academic Press, New York, 1975.

[8] C. C. MacDuffee, "Theory of Matrices," Chelsea, New York, 1956.

[9] A. S. Morse, "System Invariants under Feedback and Cascade Control," in Mathematical System Theory, Udine, 1975, G. Marchesini and S. K. Mitter (Ed.), Springer Verlag, 1976.

[10] N. T. Hung and B. D. O. Anderson, "Triangularization for the Design of Multivariable Control Systems," to appear in the IEEE Trans. on Automatic Control.

[11] S. H. Wang, "Design of Linear Multivariable Systems," Memorandum ERL M-309, Electronics Research Laboratory, University of California, Berkeley, October 1971.

[12] S. MacLane and G. Birkhoff, "Algebra," MacMillan, New York, 1965.

[13] O. Ore, "Linear Equations in Non-Commutative Fields," Annals of Mathematics, Vol. 32, pp. 463-477, 1931.

[14] D. C. Youla and P. Tissi, "n-Port Synthesis via Reactance Extraction - Part I," IEEE International Convention Record, Part 7, Circuit Theory, pp. 183-205, 1966.

[15] R. E. Kalman, "Irreducible Realizations and the Degree of a Rational Matrix," SIAM Journal, Vol. 13, pp. 520-543, June 1965.

[16] C. T. Chen, "Introduction to Linear System Theory," Holt Rinehart and Winston, New York, 1970, esp. Theorems 6-2 and Definition 6-1.

[17] V. M. Popov, "Some Properties of the Control Systems with Irreducible Matrix-Transfer Functions," in Lecture Notes in Mathematics, Seminar on Differential Equations and Dynamical Systems, Springer, Berlin-Heidelberg-New York, pp. 169-180, 1970.

[18] F. M. Callier and C. A. Desoer, "Open-Loop Unstable Convolution Feedback Systems with Dynamical Feedbacks," Automatica, Vol. 12, pp. 507-518, September 1976.

[19] F. R. Gantmacher, "Matrix Theory," vol. I, Chelsea, New York, 1959.

[20] B. Noble, "Applied Linear Algebra," Englewood Cliffs, New Jersey, 1969.

[21] C. Corduneanu and S. I. Grossman, "On the Wiener-Hopf Equation," Revue Roumaine Math. Pures Appl., Vol. XVIII, no. 10, pp. 1547-1554, 1973.

[22] F. M. Callier and C. A. Desoer, "A Graphical Test for Checking the Stability of a Linear Time-Invariant Feedback System," IEEE Trans. on Automatic Control, Vol. AC-17, pp. 773-780, December 1972.

[23] F. M. Callier and C. A. Desoer, "On Simplifying a Graphical Criterion for Linear Distributed Feedback Systems," IEEE Trans. on Automatic Control, Vol. AC-21, pp. 128-129, February 1976.

[24] W. M. Wonham, "Linear Multivariable Control," Lecture Notes in Economics and Mathematical Systems, Vol. 101, Springer Verlag, Berlin-Heidelberg-New York, 1974.

[25] W. A. Wolovich, "Linear Multivariable Systems," Applied Mathematical Sciences, Vol. 11, Springer Verlag, Berlin-Heidelberg-New York, 1974.

[26] F. M. Brasch and J. B. Pearson, "Pole Placement Using Dynamic Compensators," IEEE Trans. on Automatic Control, Vol. AC-15, no. 1, pp. 34-43, February 1970.

[27] E. J. Davison, "The Output Control of Linear Time-Invariant Multivariable Systems with Unmeasurable Disturbances," IEEE Trans. on Automatic Contol, Vol. AC-17, no. 5, pp. 621-630, October 1972.

[28] E. J. Davison, "A Generalization of the Output Control of Linear Multivariable Systems with Unmeasurable Arbitrary Disturbances," IEEE Trans. on Automatic Control, Vol. AC-20, no. 6, pp. 788-792, December 1975.

[29] E. J. Davison, "The Robust Control of a Servomechanism Problem for Linear Time-Invariant Multivariable Systems," IEEE Trans. on Automatic

Control, Vol. AC-21, no. 1, pp. 25-34, February 1976.

[30] E. J. Davison and A. Goldenberg, "Robust Control of a General Servomechanism Problem: The Servocompensator," Automatica, Vol. 11, no. 5, pp. 461-471, 1975.

[31] P. G. Ferreira, "The Servomachanism Problem and the Method of the State-Space in the Frequency Domain," International Journal of Control, Vol. 23, no. 2, pp. 245-255, 1976.

[32] B. A. Francis, "The Multivariable Servomechanism Problem from the Input-Output Viewpoint," IEEE Transactions on Automatic Control, Vol. AC-22, no. 3, pp. 322-328, June 1977.

[33] C. A. Desoer and Y. T. Wang, "Linear Time-Invariant Robust Servomechanism Problem: A Self-Contained Exposition," to appear in "Advances in Control and Dynamical Systems," C. T. Leondes (Ed.), vol. XVI, Academic Press. Also Memorandum No. UCB/ERL M77/50.

[34] C. A. Desoer and Y. T. Wang, "On the Minimum Order of a Robust Servocompensator," IEEE Trans. on Automatic Control, Vol. AC-23, no. 1, pp. 70-73, February 1978.

[35] D. V. Widder, "The Laplace Transform," Princeton University Press, 1941.

[36] L. E. Sigler, "Algebra", Springer Verlag, 1976.

[37] M. Vidyasagar, "On the Use of Right-Coprime Factorizations in Distributed Feedback Systems Containing Unstable Systems," IEEE Trans. on Circuits and Systems, Vol. CAS-25, no. 11, p. 916-922, November 1978.

[38] L. Schwartz, "Théorie des distributions," 2nd Edition, Hermann, Paris, 1966.

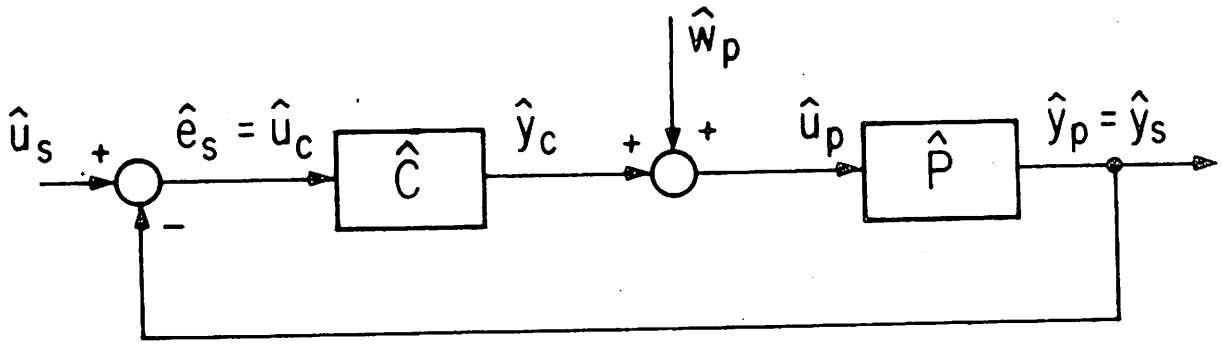
$\hat{w}_p$
$\hat{u}_s$
+
$\hat{e}_s = \hat{u}_c$
$\hat{C}$
$\hat{y}_c$
+
+
$\hat{u}_p$
$\hat{P}$
$\hat{y}_p = \hat{y}_s$
−