An Important note from the Principal Investigator Abolhassan ASTANEH-ASL on the document that follows:

The following PowerPoint was the first draft of a presentation at the RESEARCH NEEDS FOR FIRE RESISTANCE DETRMINATION AND PERFORMANCE PREDICTION, National Institute of Standards and Technology, Organized by William Grosshandler, Chief, Fire Research Division, NIST, February 19-20, 2002, Washington D.C. The PowerPoint was later finalized and presented at the meeting. The finalized version is also included in these WTC Archives (See file 507-WTC-Astaneh-…".

Respectfully,
Abolhassan ASTANEH-ASL, Ph.D., P.E.
Professor and Principal Investigator for the NSF Funded UC Berkeley WTC Project (Duration: 10-2001 to 9-2002)

of 26

Protection of Steel Structures Against Impact, Explosion and Ensuing Fire

By

Abolhassan Astaneh-Asl
University of California, Berkeley

A Presentation at the

RESEARCH NEEDS FOR FIRE RESISTANCE DETRMINATION AND P PREDICTION

National Institute of Standards and Technology

Organized by William Grosshandler, Chief, Fire Research Division, NIST

February 19-20, 2002, Washington D.C.

Wtcphotos.com

This document is part of the “World Trade Center Post-Disaster Reconnaissance and Perishable Structural Engineering Data Collection”, a research project funded by the U.S. National Science Foundation at the Univ. of California Berkeley with Prof. Abolhassan ASTANEH-ASL as Principal Investigator (http://www.ce.berkeley.edu/~astaneh) as the Principal Investigator. Duration of the project was from 10/2001 to 9/2002. Further Information and project archives are at http://lib.berkeley.edu/ENGI/WTC. © 2001 Abolhassan ASTANEH-ASL.

"This work is licensed under a Creative Commons Attribution-NonCommercial -No Derivatives License."

Types of Impact, Explosives and Ensuing Fires on Tall Buildings

Impact of airborne or ground attacks such as jetliners, smaller planes, rockets and cars

Explosions inside or outside the building as a result of above attacks

Ensuing Fires due to fuel delivered by attackers or fuel present inside the building.

Effects of *Impact* on the Buildings

1. **Applies concentrated dynamic force to the building.**
2. **Depending on dynamic interaction of the building with impacting object, dynamic forces will be generated throughout the building and its structure.**
3. **Such dynamic forces can cause serious damage at local and global level to structural, non-structural and fire protection system.**

In case of "extreme event" attacks and fires, the main goal of protection is life safety by preserving egress routes and preventing Collapse.

A building can collapse due to:

These photos may be subject to copyright by others.

a. **Initial damage to its structure,**

Deterioration caused by ensuing fire.

Effects of Impact and Ensuing Fire on the Structure

1. **Local and Global Damage to Structure**
2. **Initial Damage to Fire Protection Systems**
3. **Progressive Collapse Due to Deterioration in Strength or Stability of Gravity Load Carrying System Caused by Ensuing Fire.**

Tests of Floors Catenary Action to Prevent Progressive Collapse

Abolhassan Astaneh-Asl, Ph.D., P.E.
Erik Madsen and Roger Jung

Department of Civil and Environmental Engineering
University of California, Berkeley
2000-2001

Sponsored by
General Services Administration and
Skilling, Ward Magnusson Barkshire

Specimen

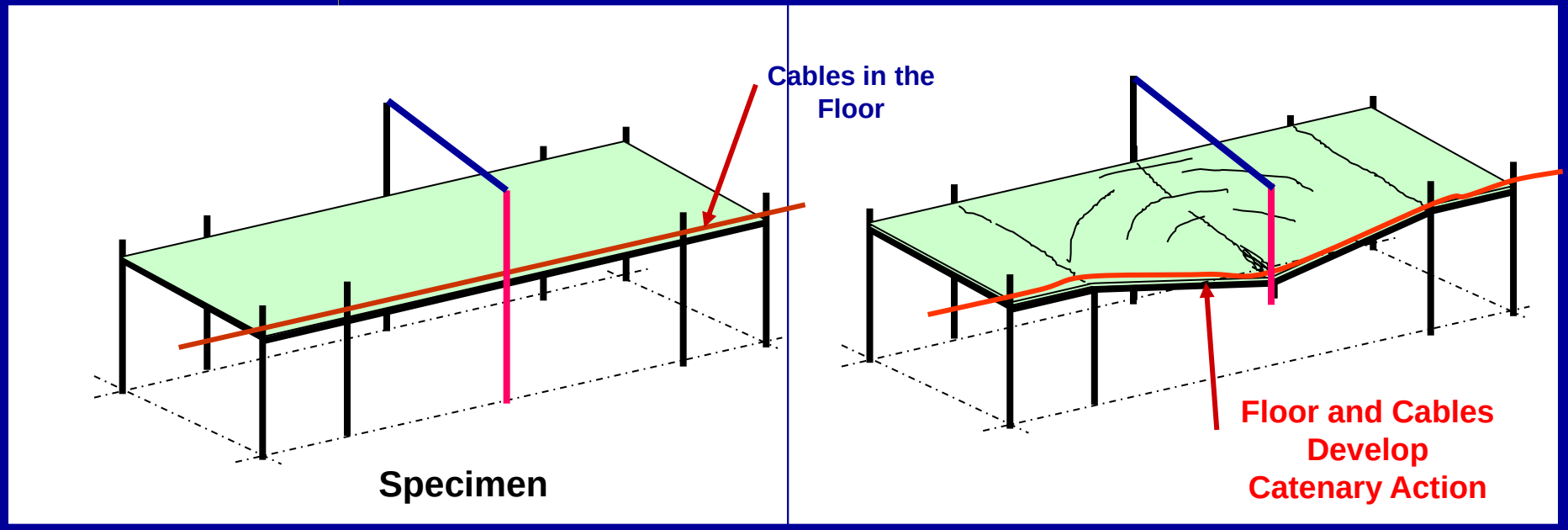
Cables in the Floor
Specimen
Floor and Cables Develop Catenary Action

Floor Deformation, Test-1

Column had 110 kips, dropped 20 inches and was supported by Catenary action of the cables and floor.

Analytical Model of Specimen

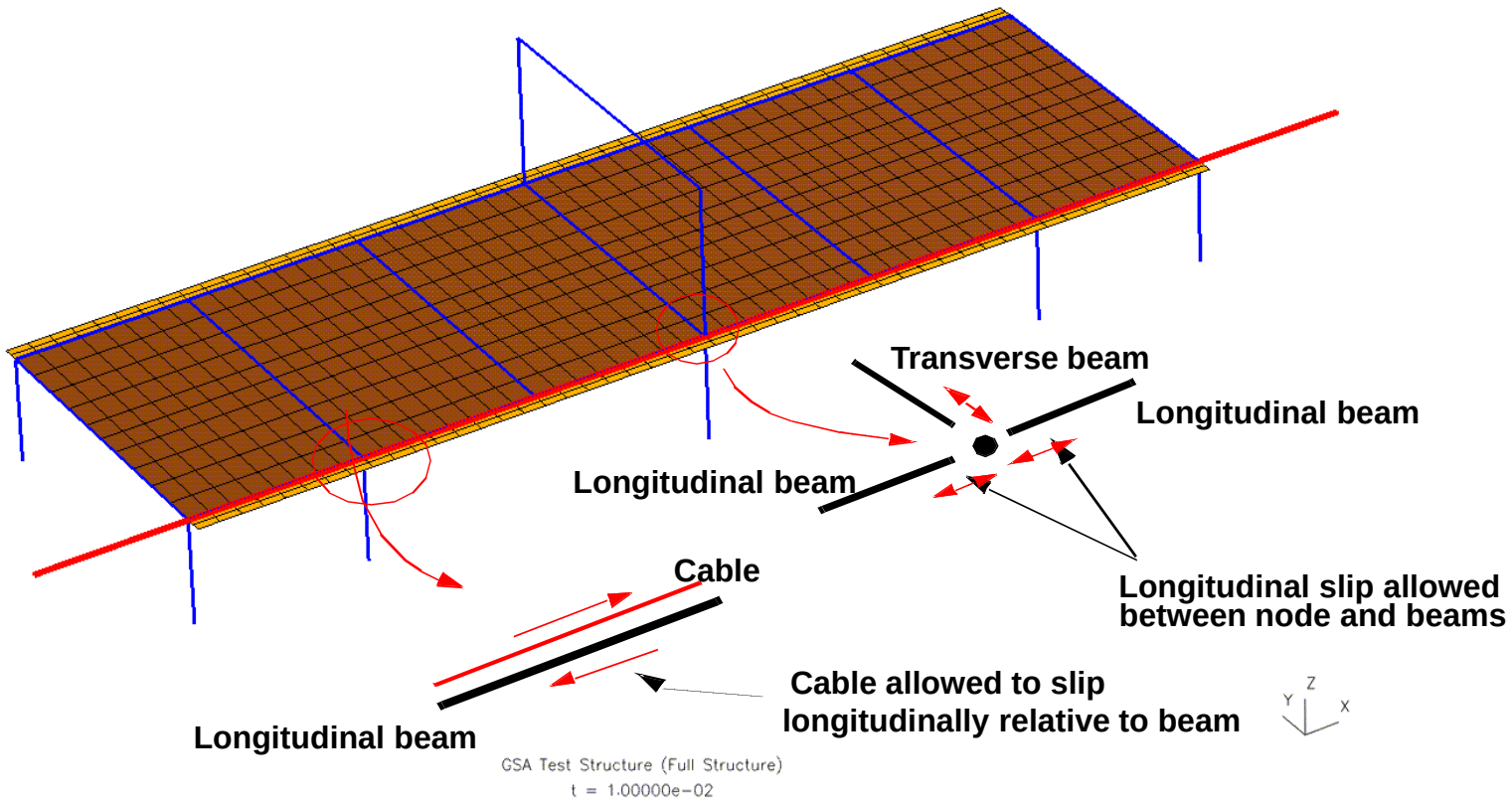

Finite element Analyses

The main challenge was to model composite floor realistically.

Vertical Displacements

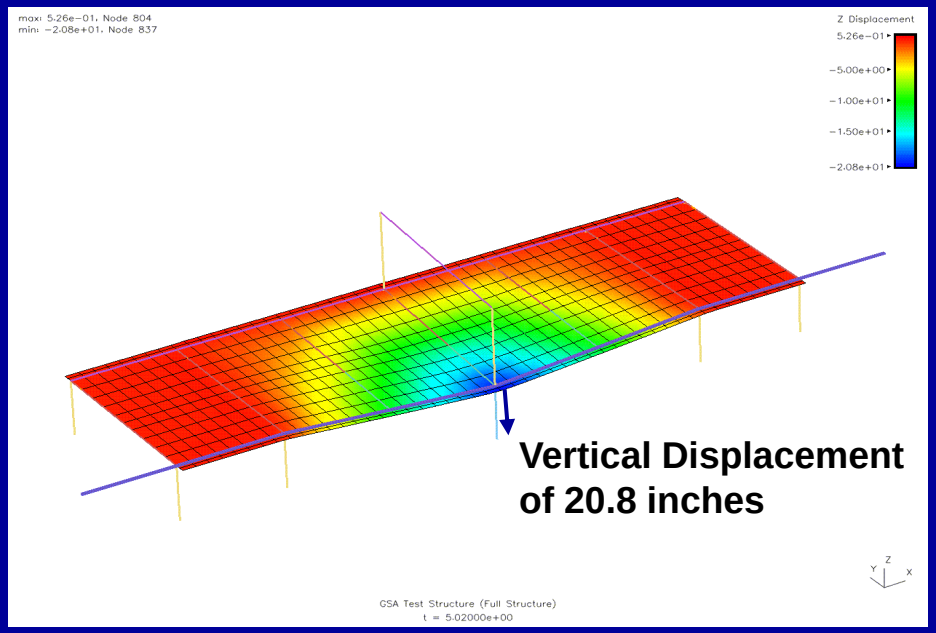

Horizontal Displacements

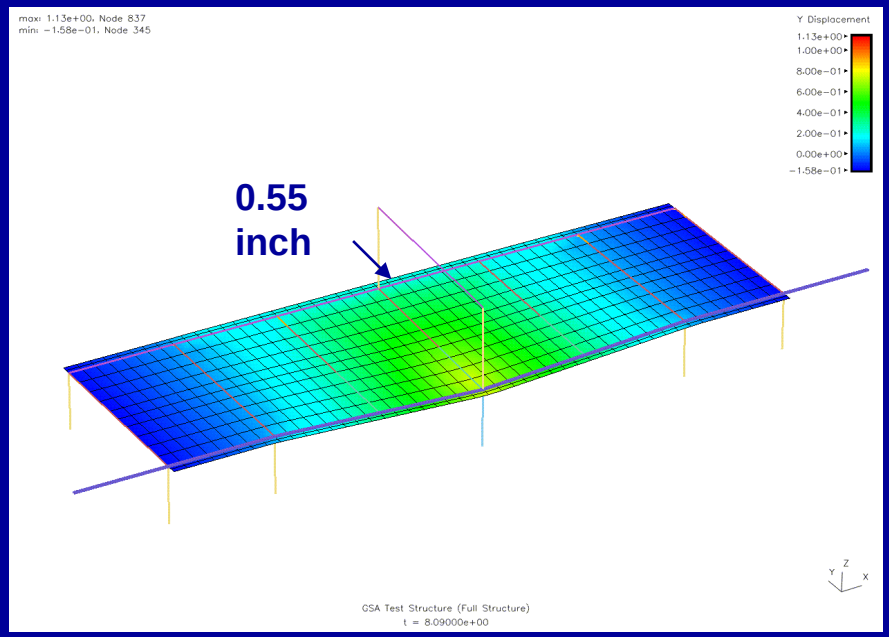

Challenges and Research Needs in Realistic Modeling of Behavior of Steel and Composite Structures under Intense and Sustained Fires

Research Needs

Material:

Research Data on Fire-Resistance of Light Weight and High Strength Concrete is Needed

Steel Structures:

Steel Structures:

Research data and more realistic models of :

1. *Local Buckling*
2. Overall Buckling and
3. Connections

can be very useful.

Local Buckling in Steel and Composite Structures at Elevated Temperatures:

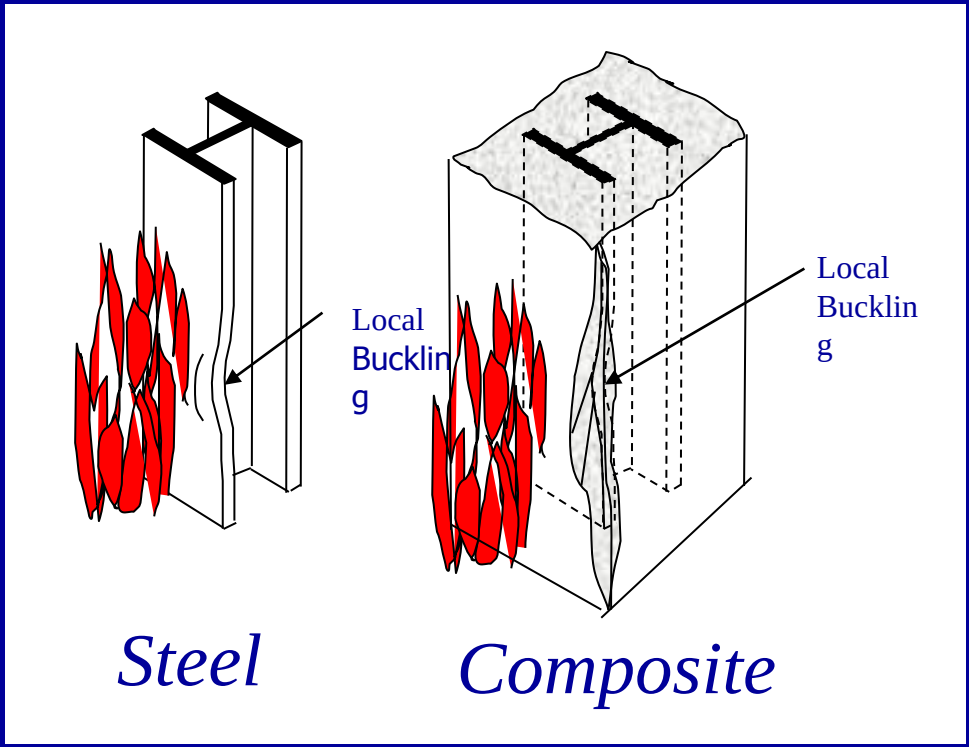

More reliable data and better prediction models are needed

Local Buckling in Steel and Composite Structures at Elevated Temperatures:

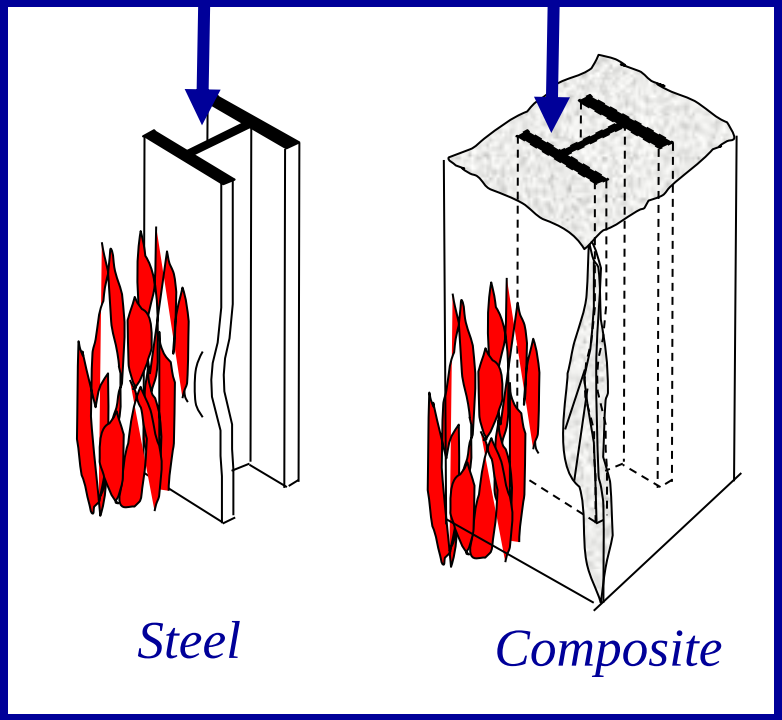

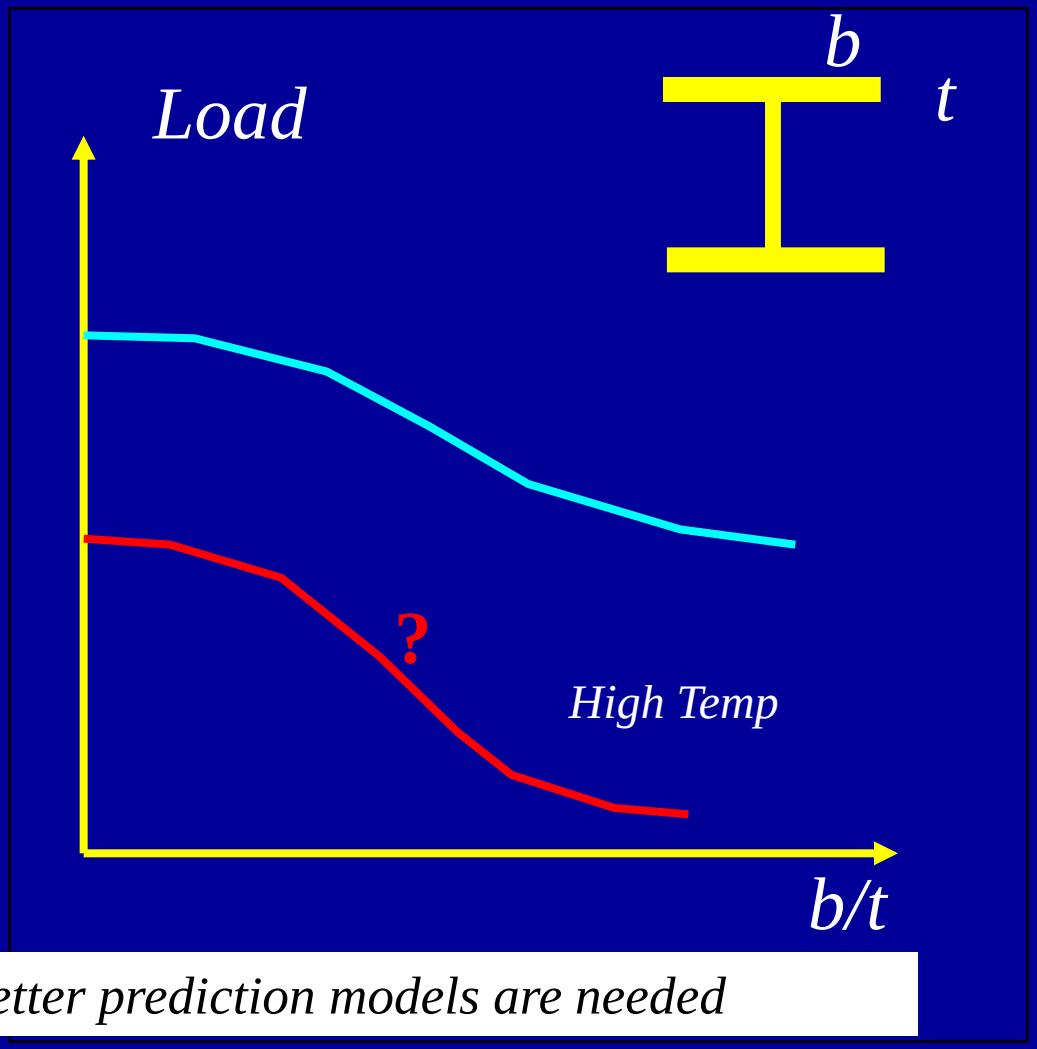

More reliable data and better prediction models are needed

Overall Buckling in Steel and Composite Structures at Elevated Temperatures:

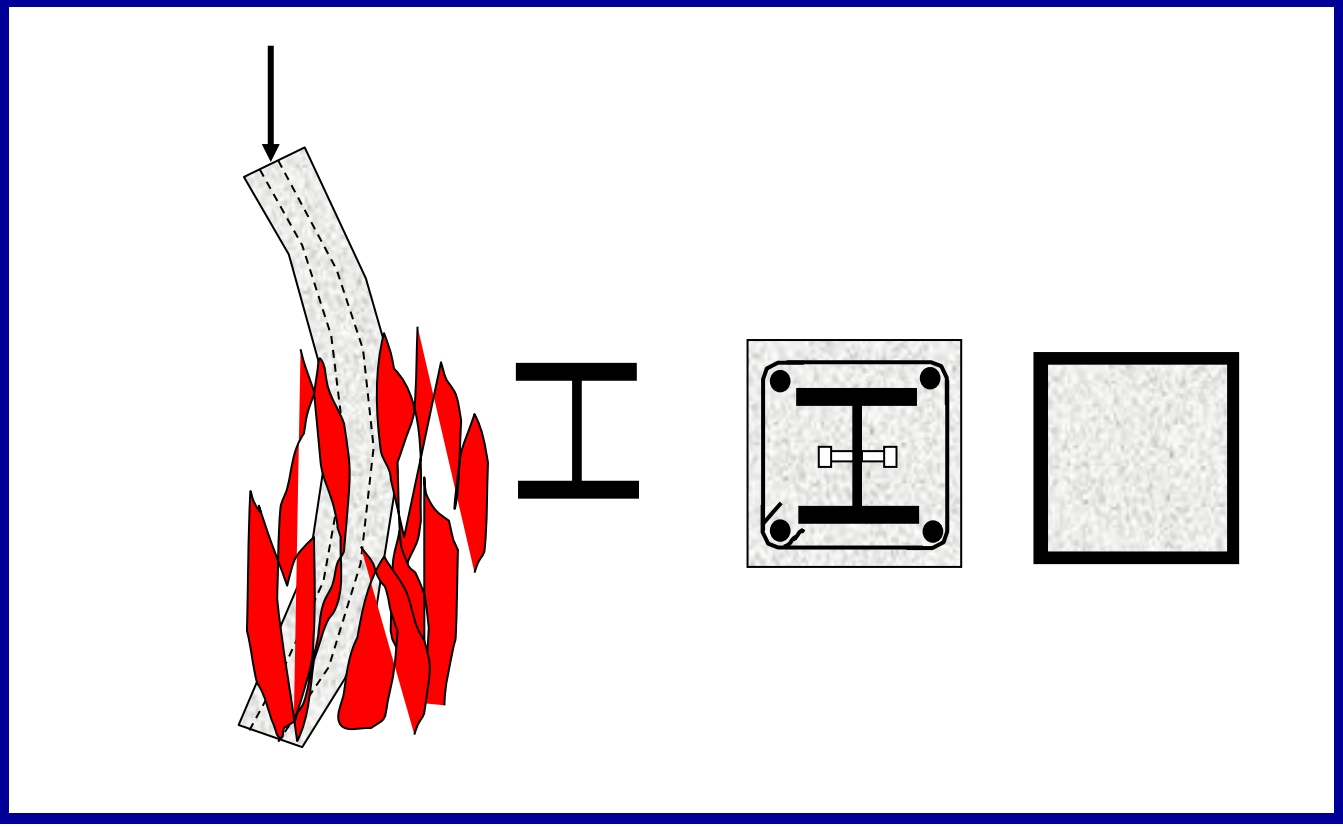

More reliable data and better prediction models are needed

Composite Shear Walls at Elevated Temperatures:

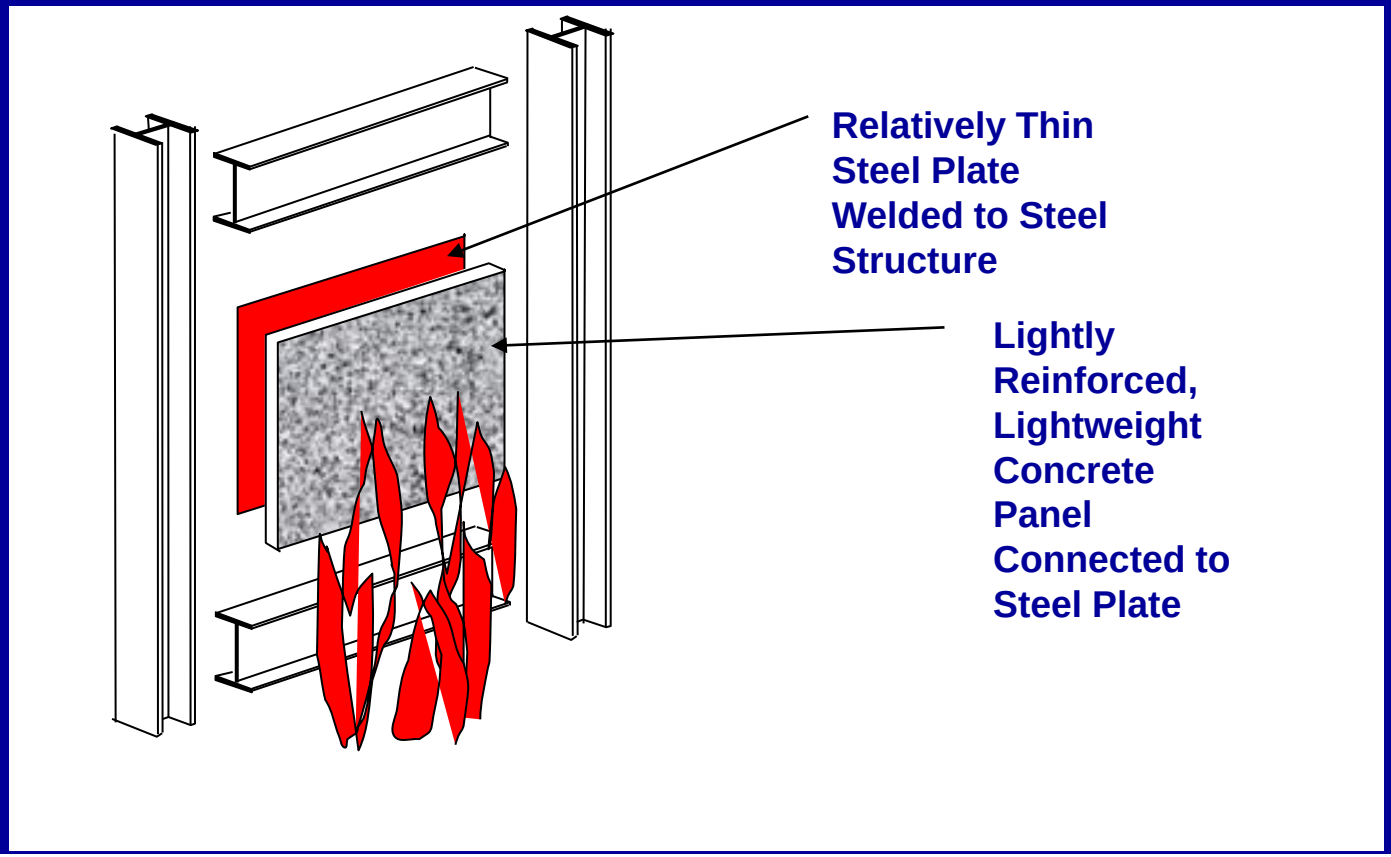

More reliable data and better prediction models are needed

Seismic Studies of an Innovative and Traditional Composite Shear Walls

by Q. Zhao and A. Astaneh-Asl

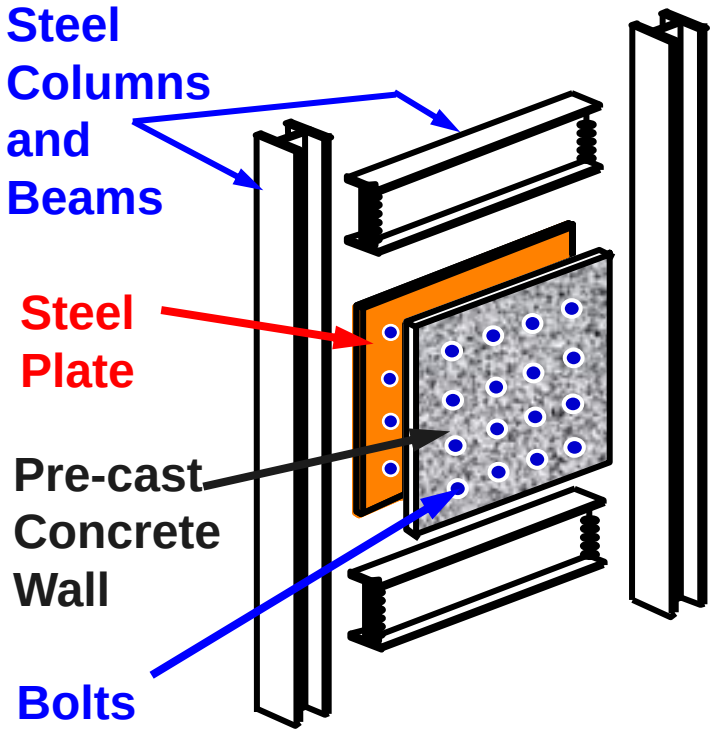

Components of Composite Shear Wall

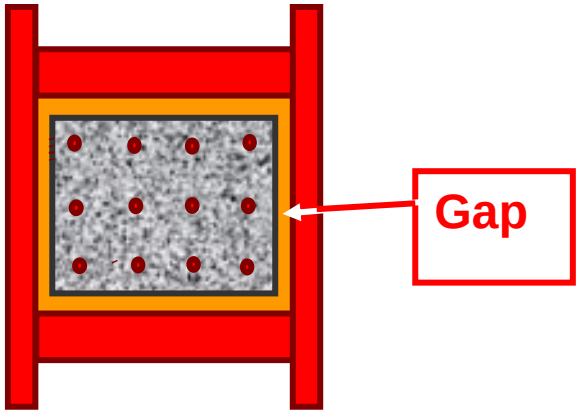

Innovative Composite Wall

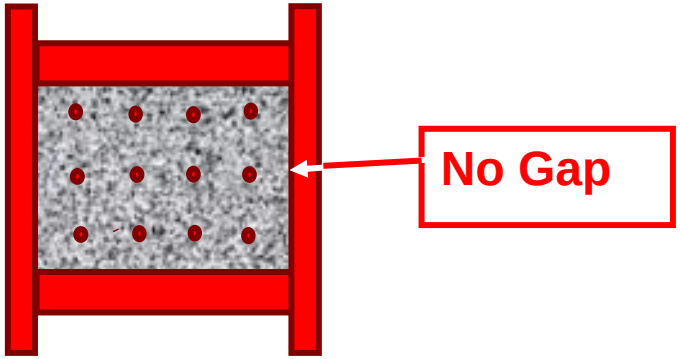

Traditional Composite Walls

Sponsor: National Science Foundation

Ongoing Cyclic Tests of Composite Shear Walls

- Two 1/2-scale specimens tested.
- Cyclic shear displacements applied to the top of specimens.
- Drifts of up to 4.5% reached

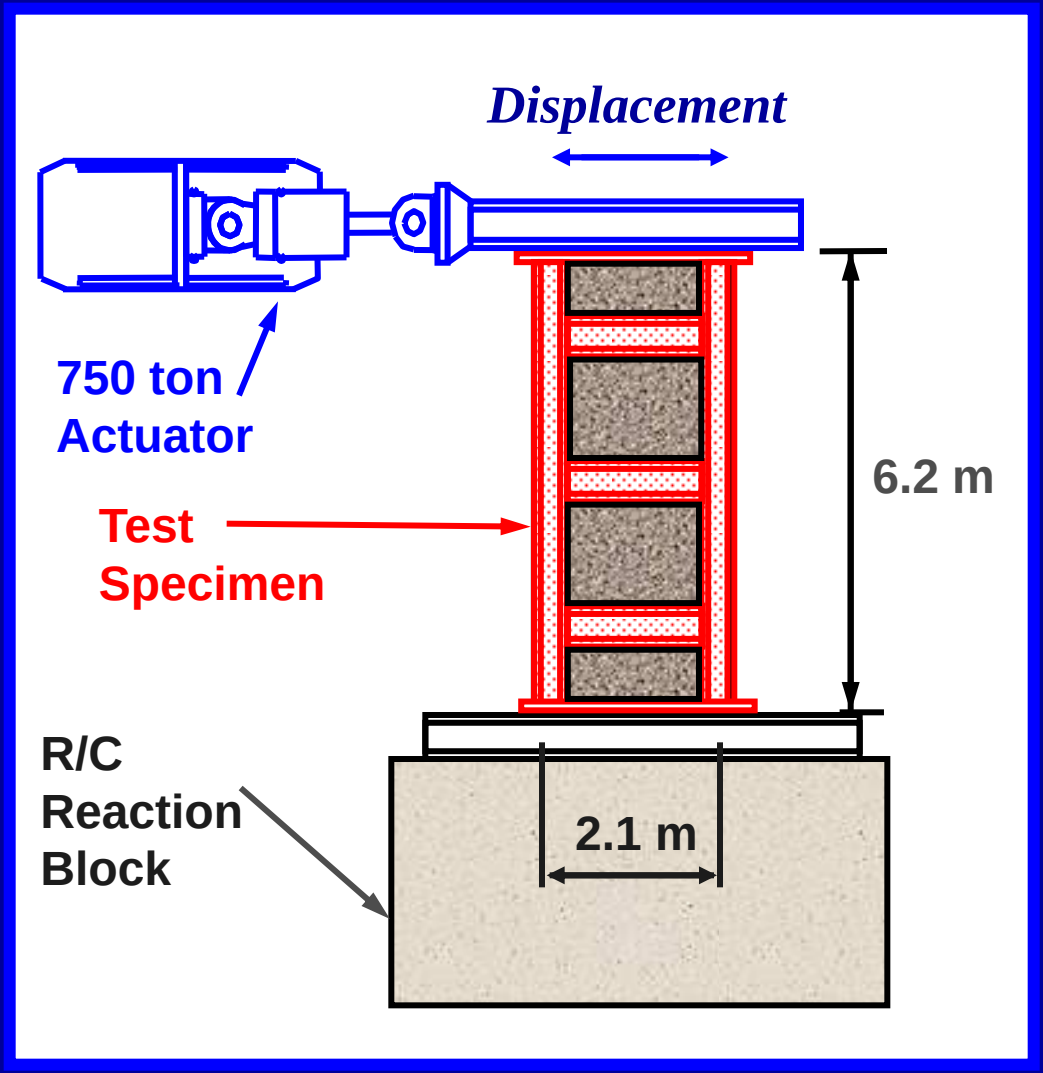

Specimen 2 Prior to the Test

Seismic Studies of an Innovative and Traditional Composite Shear Walls, by Q. Zhao and A. Astaneh-Asl

Views of Specimen

http://lib.berkeley.edu/ENGI/WTC

Copyright © 2000 Abolhassan ASTANEH-ASL

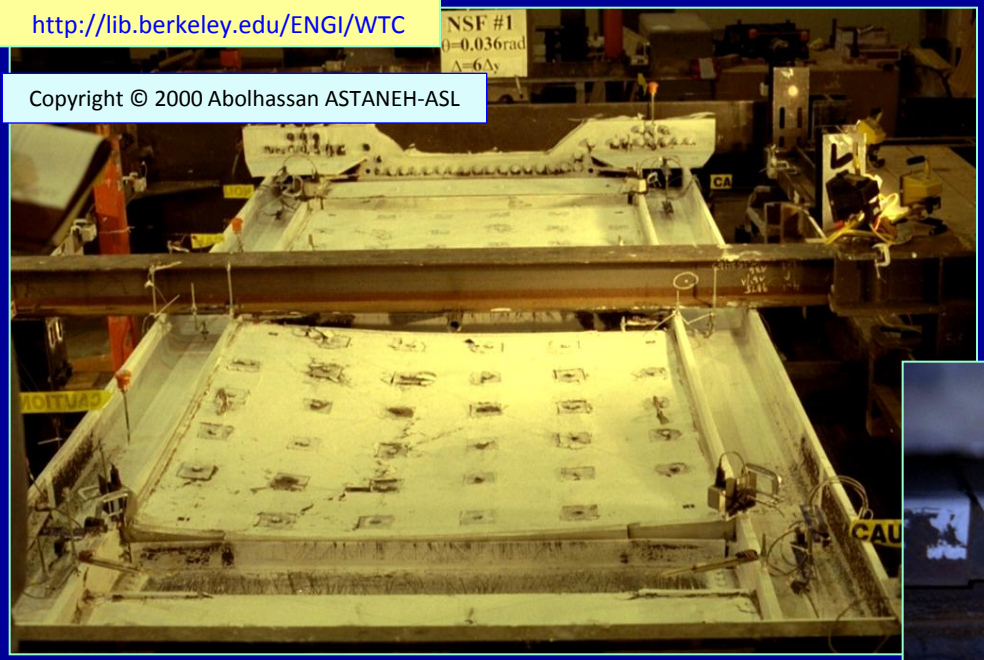

http://lib.berkeley.edu/ENGI/WTC

Copyright © 2000 Abolhassan ASTANEH-ASL

Seismic Studies of an Innovative and Traditional Composite Shear Walls, by Q. Zhao and A. Astaneh-Asl

Composite Shear Walls Can Be Used Around Stairwells to Protect Egress Routes

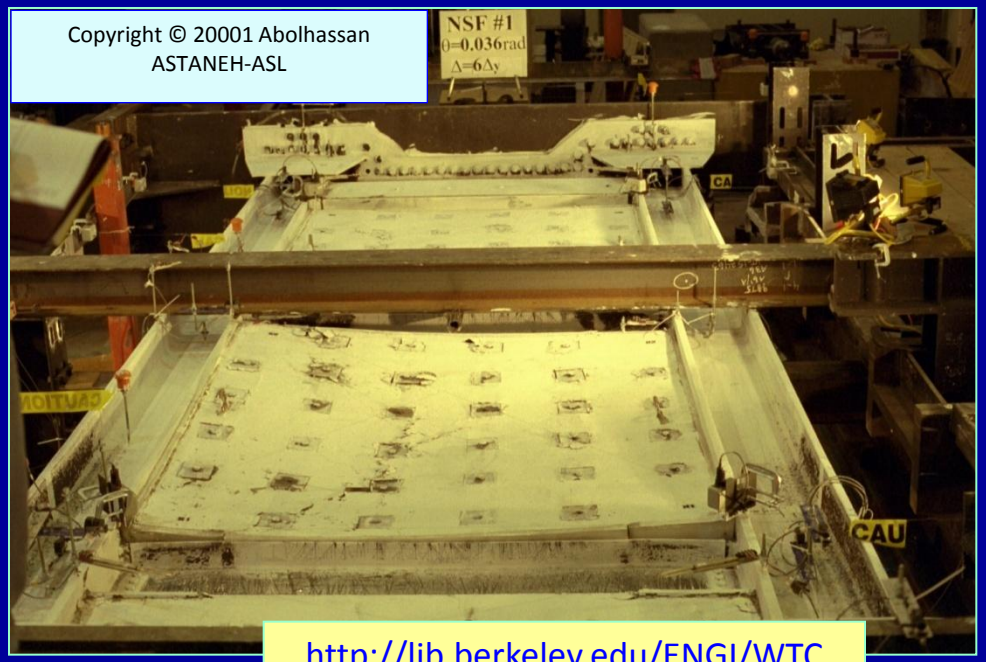

http://lib.berkeley.edu/ENGI/WTC

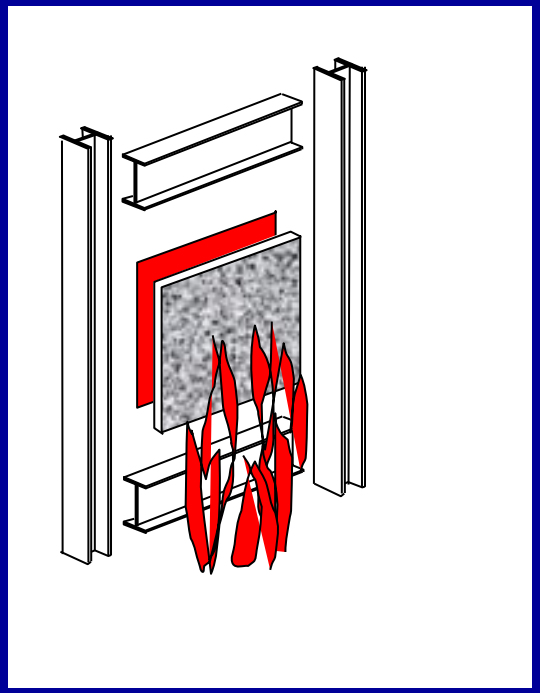

Research Data on Fire Resistance Can be Useful

Seismic Studies of an Innovative and Traditional Composite Shear Walls, by Q. Zhao and A. Astaneh-Asl

Global Performance of Various Structural Systems at Elevated Temperatures:

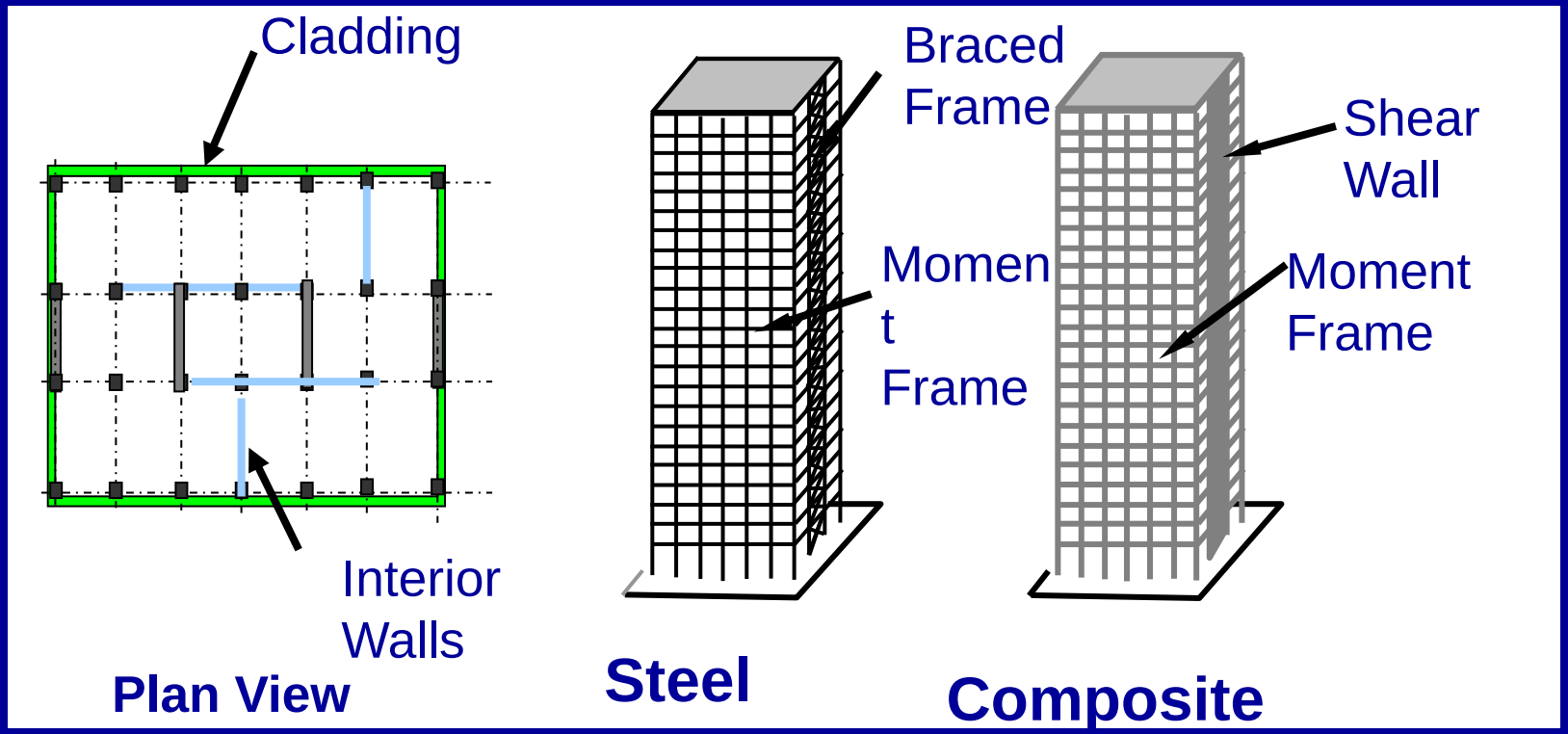

More reliable data on Progressive Collapse are needed

Some Research Needs on Steel and Composite Structures Subjected to High Temperature

- ***Light Weight Concrete***
- ***Local Buckling***
- ***Overall Buckling***
- ***Performance of Various Systems***