GRAPH-THEORETIC PROPERTIES OF DYNAMIC NONLINEAR NETWORKS

by

Leon O. Chua and Douglas N. Green

Memorandum No. ERL-M507

14 March 1975

(over)

GRAPH-THEORETIC PROPERTIES

OF DYNAMIC NONLINEAR NETWORKS

by

Leon O. Chua and Douglas N. Green

Memorandum No. ERL-M507

14 March 1975

ELECTRONICS RESEARCH LABORATORY

College of Engineering
University of California, Berkeley
94720

GRAPH-THEORETIC PROPERTIES OF DYNAMIC NONLINEAR NETWORKS†

Leon O. Chua and Douglas N. Green††

ABSTRACT

Graph-theoretic concepts are used to deduce properties of nonlinear networks and properties of nonlinear resistive n-ports. The basic result is that if the ports of an n-port form no loops and form no cutsets, then the port voltages and currents are linear functions of the internal voltages and currents only; i.e., no other external port voltage or port current is involved. This result is very general in the sense that it is independent of the constitutive relations of the internal n-port elements. It is also a rather subtle result because it forms the basis of a large number of network and n-port theorems. For example, in examining the closure properties of n-ports, this result is used to show that if the resistors of an n-port are passive or strictly increasing, or eventually strictly passive, etc., then the n-port also has the property. Many of these conclusions remain valid when the n-port contains independent voltage and current sources.

Two extensions of this main result are presented. First, using the constitutive relations of the resistors, graph-theoretic conditions are given such that the resistor voltages and currents are functions of the port voltages and currents of a resistive n-port. Second, in a network containing capacitors, inductors, resistors, and sources, graph-theoretic conditions are given such that the voltage and current waveforms of the capacitors and inductors are functions of the resistor and source voltage and current waveforms.

Dynamic nonlinear networks containing capacitors, inductors, resistors, and sources such that there are loops of capacitors, or cutsets of inductors are shown to be equivalent to networks without such loops or cutsets. Explicit analytical expressions are given for specifying the constitutive relations of the elements of the equivalent circuit. This result allows the generalization of many previous results in nonlinear networks which exclude capacitor loops and inductor cutsets.

---

†Research sponsored by the Naval Electronic Systems Command Contract N00039-75-C-0034 and the National Science Foundation Grant GK 32236X1.

††Department of Electrical Engineering and Computer Sciences and the Electronics Research Laboratory, University of California, Berkeley, California 94720.

I. Introduction

Much of the use of graph theory in network analysis has been in the area of linear networks [1]-[3]. When applied to nonlinear networks, graph theory has been used mainly in the formulation of network equations [4]-[6] and, to a limited extent, in analyzing the behavior of the solutions of these equations [7]-[11]. In this paper, we will use graph-theoretic concepts to deduce in a qualitative way the various properties of dynamic nonlinear networks, and of nonlinear n-ports. This will involve examination of the graph of the network or n-port, and examination of the individual circuit elements. We will not solve, or form the network or n-port equations.

This paper is the first of a series of three dealing with nonlinear dynamic networks. The two other papers are [12], "A Qualitative Analysis of the Behavior of Dynamic Nonlinear Networks: Stability of Autonomous Networks," and [13], "A Qualitative Analysis of the Behavior of Dynamic Nonlinear Networks: Steady-State Solutions of Nonautonomous Networks." The mathematical methods of these two papers coupled with the graph-theoretic results given here will lead to an understanding of the behavior of dynamic nonlinear networks. In particular, we will answer questions of the following type: Let $\mathcal{N}$ be a dynamic nonlinear network. Under what condition may we conclude that all network voltage and current waveforms are bounded, or (eventually) uniformly bounded? If $\mathcal{N}$ contains T-periodic sources, when is there a T-periodic solution of $\mathcal{N}$, or a subharmonic solution of $\mathcal{N}$? If $\mathcal{N}$ contains constant independent

voltage and current sources, when does $\mathcal{N}$ have a unique, globally asymptotically stable operating point? When $\mathcal{N}$ has time-varying independent sources, under what conditions does $\mathcal{N}$ have a unique steady-state solution (in the same sense as in linear networks)? In this case, do the transients decay exponentially? While answers to some of these questions have been published for various classes of nonlinear differential equations [14]-[16], they are strictly mathematical in nature and often contain conditions which are either too strong or impractical when applied to circuits. The main feature of our results is that most of the theorems are couched in graph- and circuit-theoretic terms so that they can be easily verified by examining only the network topology and the elements' constitutive relations. The graph-theoretic properties to be presented in this paper are crucial to the derivation of these results.

In Sec. II, we present the model of the dynamic, nonlinear network $\mathcal{N}$. We view $\mathcal{N}$ as a resistive n_p-port N containing resistors and sources; the capacitors and inductors are attached to the ports of N. The concepts of passive and increasing resistors are extended and expanded to definitions of a large class of properties of functions. We will examine network $\mathcal{N}$ and n_p-port N with respect to these properties. Previous mathematical and graph-theoretic results which will be employed in developing our results are presented. Especially useful is the Colored Arc Corollary; this is a special version of the Colored Arc Theorem [17].

In Sec. III, we discuss the "closure" properties of an n_p-port N which contains nonlinear resistors. For example, if the resistors of

N are passive, strictly-increasing, or eventually strictly-passive (Def. 2), conditions are given so that N has these properties. The primary condition comes from Theorem 2 -- <u>there is no cutset and no loop formed by the ports</u>. In Sec. IV, we examine the manner in which these properties of N are affected when independent sources are attached.

In Sec. V, the capacitors and inductors are attached to the ports of N to form network $\mathcal{N}$. We show that the condition "there are no loops of capacitors and no cutsets of inductors" which is often stated as hypothesis in the literature on nonlinear networks is not necessary; these loops and cutsets may be deleted without changing the voltages and currents of the elements of $\mathcal{N}$. We also give an extension of Theorem 2.

II. The Dynamic Nonlinear Network; Properties of Functions

The nonlinear, dynamic network $\mathcal{N}$ is shown in Fig. 1. It contains n_C (possibly coupled) one-port capacitors, and n_L (possibly coupled) one-port inductors.[1] Let $\underset{\sim}{v}_C$, $\underset{\sim}{i}_C$, $\underset{\sim}{q}_C \in \mathbb{R}^{n_C}$ and $\underset{\sim}{v}_L$, $\underset{\sim}{i}_L$, $\underset{\sim}{\phi}_L \in \mathbb{R}^{n_L}$ denote respectively the capacitor voltages, currents, charges, and the inductor voltages, currents and fluxes. The constitutive relations of a <u>voltage-controlled capacitor</u> and a <u>current-controlled inductor</u> are given respectively by:

$$\begin{aligned} \underset{\sim}{q}_C &= \underset{\sim}{f}_C(\underset{\sim}{v}_C) \\ \underset{\sim}{\phi}_L &= \underset{\sim}{f}_L(\underset{\sim}{i}_L) \end{aligned} \tag{1}$$

[1] There is no loss of generality in our choice of this network model, since any multi-port or multi-terminal capacitor (resp., inductor) can always be modeled as a system of "coupled" one-port capacitors (resp., inductors). Observe also that an (n+1)-terminal element can always be modeled as a "grounded" n-port.

where $\underset{\sim}{f}_C$: $\mathbb{R}^{n_C} \to \mathbb{R}^{n_C}$ and $\underset{\sim}{f}_L$: $\mathbb{R}^{n_L} \to \mathbb{R}^{n_L}$. Define the n_p-vectors ($n_p = n_C + n_L$) (the subscript "p" denotes a "port variable")

$$\underset{\sim}{v}_p \triangleq \begin{pmatrix} \underset{\sim}{v}_C \\ \underset{\sim}{v}_L \end{pmatrix} \quad ; \quad \underset{\sim}{x}_p \triangleq \begin{pmatrix} \underset{\sim}{v}_C \\ \underset{\sim}{i}_L \end{pmatrix} \quad ; \quad \underset{\sim}{i}_p \triangleq \begin{pmatrix} \underset{\sim}{i}_C \\ \underset{\sim}{i}_L \end{pmatrix}$$

$$\underset{\sim}{y}_p \triangleq \begin{pmatrix} \underset{\sim}{i}_C \\ \underset{\sim}{v}_L \end{pmatrix} \quad ; \quad \underset{\sim}{z}_p \triangleq \begin{pmatrix} \underset{\sim}{q}_C \\ \underset{\sim}{\phi}_L \end{pmatrix} \tag{2}$$

then (1) becomes

$$\underset{\sim}{z}_p = \underset{\sim}{f}_p(\underset{\sim}{x}_p) \tag{3}$$

$\underset{\sim}{f}_p(\cdot) = [\underset{\sim}{f}_C^T(\cdot), \underset{\sim}{f}_L^T(\cdot)]^T$ (where the superscript "T" denotes transpose).

We view the capacitors and inductors of $\mathcal{N}$ as attached to an n_p-port N which contains (nonlinear) one-port resistors, (nonlinear) multi-port resistors,[2] and independent voltage and current sources -- see Fig. 1. The vectors $\underset{\sim}{v}_p$, $\underset{\sim}{i}_p$, $\underset{\sim}{x}_p$, $\underset{\sim}{y}_p \in \mathbb{R}^{n_p}$ of Eq. (2) are the port variables of N as well as the capacitor and inductor variables.

---

[2] N also contains <u>controlled</u> voltage and current sources in the following sense: we assume every controlled source of N is represented by "coupling" within multi-port resistors. For example, although transistors, FET, and operational amplifiers are multi-terminal elements which are often modeled using controlled sources, they can also be represented as multi-port resistors. Hence, a transistor can be characterized by the constitutive relation

$$\begin{pmatrix} i_R^1 \\ i_R^2 \end{pmatrix} = \underset{\sim}{g}_R^{\alpha} \begin{pmatrix} v_R^1 \\ v_R^2 \end{pmatrix}$$

Assume resistor R^α of N is an n_α-port resistor. Its voltage and current are, respectively, $\underset{\sim}{v}_R^\alpha$, $\underset{\sim}{i}_R^\alpha \in \mathbb{R}^{n_\alpha}$. In defining its constitutive relations (when it exists) we assume that for each port of the n_α-port resistor either the port voltage or the port current is an independent resistor variable, and the remaining port variable is a dependent resistor variable. Let $\underset{\sim}{x}_R^\alpha$, $\underset{\sim}{y}_R^\alpha \in \mathbb{R}^{n_\alpha}$ denote respectively the independent and dependent resistor vectors. The constitutive relation is therefore

$$\underset{\sim}{y}_R^\alpha = \underset{\sim}{g}_R^\alpha(\underset{\sim}{x}_R^\alpha) \tag{4}$$

Let m_R be the number of resistors of N, and let n_R be the number of all internal resistor ports of N ($m_R = n_R$ if, and only if, all resistors are two-terminal elements). The composite resistor vectors are $\underset{\sim}{v}_R$, $\underset{\sim}{i}_R \in \mathbb{R}^{n_R}$ representing respectively all internal resistor voltages and currents. Let the m_R resistors be described by their constitutive relations $\underset{\sim}{g}_R^1(\cdot)$, $\underset{\sim}{g}_R^2(\cdot), \ldots, \underset{\sim}{g}_R^{m_R}(\cdot)$, and let $\underset{\sim}{x}_R$, $\underset{\sim}{y}_R \in \mathbb{R}^{n_R}$ denote, respectively, the independent and dependent resistor vectors, then

$$\underset{\sim}{y}_R = \underset{\sim}{g}_R(\underset{\sim}{x}_R) \tag{5}$$

is the composite resistor constitutive relation, where

$$\underset{\sim}{g}_R(\cdot) \triangleq [g_R^{1T}(\cdot),\ g_R^{2T}(\cdot), \ldots,\ g_R^{\alpha T}(\cdot), \ldots,\ g_R^{m_R^T}(\cdot)]^T$$

Let $\underset{\sim}{u}_S \in \mathbb{R}^{n_S}$ denote the voltages of the independent voltage

---

Moreover, the function $\underset{\sim}{g}_R^\alpha(\cdot)$ has the various properties which we investigate in this paper. For example, when $\underset{\sim}{g}_R^\alpha(\cdot)$ comes from the Ebers-Moll equation of a silicon transistor, then $\underset{\sim}{g}_R^\alpha(\cdot)$ is a strictly-passive, C^∞-diffeomorphism mapping $\mathbb{R}^2$ onto $\mathbb{R}^2$ [18].

sources and the currents of independent current sources. The constitutive relation of the "overall resistor" n_p-port N, when it exists, is

$$\underset{\sim}{y}_p = -\underset{\sim}{g}_p(\underset{\sim}{x}_p, \underset{\sim}{u}_S) \tag{6}$$

where $\underset{\sim}{g}_p(\cdot,\cdot)$: $\mathbb{R}^{n_p+n_S} \to \mathbb{R}^{n_p}$, or if there are no independent sources

$$\underset{\sim}{y}_p = -\underset{\sim}{g}_p(\underset{\sim}{x}_p) \tag{7}$$

where $\underset{\sim}{g}_p(\cdot)$: $\mathbb{R}^{n_p} \to \mathbb{R}^{n_p}$. We will used both forms of $\underset{\sim}{g}_p(\cdot)$ in the sequel, and in every case we will make explicit (if necessary) which equation is being used.

<u>Remarks</u>: 1. Eq. (7) can represent N containing constant sources. See Theorem 8, Fig. 9.

2. Eqs. (6) and (7) have a negative sign because the port currents (in Fig. 1) are directed away from the ports on "voltage-driven" (i.e., capacitor) ports, and the port voltages are reversed on the "current-driven" (i.e., inductor) ports. These reference directions and polarities are chosen so that they are consistent with those assigned to capacitors and inductors.

Using (3) with (6) and (7), we can write the differential equation describing $\mathcal{N}$. Note that $\frac{d}{dt}\underset{\sim}{z}_p(t)=\dot{\underset{\sim}{z}}_p(t)=\underset{\sim}{y}_p(t)$, and assume the function $\underset{\sim}{f}_p(\cdot)$ in (3) is invertible.[3] Corresponding to (6) and (7) we have

[3] We can rewrite (3) as $\underset{\sim}{x}_p = \underset{\sim}{h}_p(\underset{\sim}{z}_p)$ for some function of $\underset{\sim}{h}_p(\cdot)$. This would avoid using the inverse of $\underset{\sim}{f}_p(\cdot)$ in (8). However, (3) is the appropriate form to present Theorem 11; this theorem deals with loops of capacitors and cutsets of inductors. The function $\underset{\sim}{h}_p(\cdot)$ is used in [12] and [13].

$$\dot{\underset{\sim}{z}}_p = -\underset{\sim}{g}_p(\underset{\sim}{f}_p^{-1}(\underset{\sim}{z}_p), \underset{\sim}{u}_s) \tag{8a}$$

and

$$\dot{\underset{\sim}{z}}_p = -\underset{\sim}{g}_p(\underset{\sim}{f}_p^{-1}(\underset{\sim}{z}_p)) \tag{8b}$$

The graph theory principles we use in this paper are Kirchoff's Current and Voltage Laws (KCL, KVL) [3], Tellegen's Theorem [3], and the following special case of the Colored Arc Theorem [17] which we call the:

> <u>Colored Arc Corollary</u>: Let b be a branch of a (not necessarily connected) graph $\mathcal{G}$. Partition the remaining branches of $\mathcal{G}$ into two arbitrary sets: Set A and Set C. Then, branch b forms a loop exclusively with branches of Set A if, and only if, it does not form a cutset exclusively with branches of Set C.

We will be using the Colored Arc Corollary extensively, and it is instructive to discuss the following example of its use. This is also an illustration of a direct way to prove the Colored Arc Corollary without resorting to the Colored Arc Theorem.

Let $\eta_{⓪}$ be a node of graph $\mathcal{G}$, where $k \geq 2$ branches are attached at node $\eta_{⓪}$. See Fig. 2.

For each branch b^j, $j = 1,\ldots,k$, let Set A^j denote all branches not attached to $\eta_{⓪}$, and let Set C^j denote all branches attached to $\eta_{⓪}$ except b^j. Now, b^j forms a cutset exclusively with branches of set C^j. From the Colored Arc Corollary, we conclude b^j does not form a loop exclusively with branches of Set A^j. Indeed, this must be true since any loop involving b^j must also include some other branch attached to $\eta_{⓪}$.

There are two important properties of resistors which are of interest to us:

Def. 1: [19] Let R be an n-port resistor[4] with voltage $\underset{\sim}{v}_R \in \mathbb{R}^n$, and current $\underset{\sim}{i}_R \in \mathbb{R}^n$

(i) R is a passive resistor if, and only if, for all admissible pairs $(\underset{\sim}{v}_R, \underset{\sim}{i}_R)$,

$$\underset{\sim}{v}_R^T \underset{\sim}{i}_R \geq 0 \tag{9a}$$

(ii) R is an increasing (or incrementally passive) resistor if, and only if, for all admissible pairs $(\underset{\sim}{v}_R, \underset{\sim}{i}_R)'$ and $(\underset{\sim}{v}_R, \underset{\sim}{i}_R)''$

$$[\underset{\sim}{v}_R' - \underset{\sim}{v}_R'']^T [\underset{\sim}{i}_R' - \underset{\sim}{i}_R''] \geq 0 \tag{9b}$$

The passive and increasing concepts of resistors may be applied and extended as properties of functions. In the following, we use both $\underset{\sim}{h}(\cdot)$ and $\underset{\sim}{h}$ to represent a function.

Def. 2: The function $\underset{\sim}{h}$: $\mathbb{R}^n \to \mathbb{R}^n$ is

(i) passive with respect to $\underset{\sim}{x}_0 \in \mathbb{R}^n$ if, and only if, for all $\underset{\sim}{x} \in \mathbb{R}^n$

$$(\underset{\sim}{x} - \underset{\sim}{x}_0)^T \underset{\sim}{h}(\underset{\sim}{x}) \geq 0 \tag{10}$$

(ii) strictly passive with respect to $\underset{\sim}{x}_0 \in \mathbb{R}^n$ if, and only if, (10) is true and the left side is positive for all $\underset{\sim}{x} \neq \underset{\sim}{x}_0$

(iii) eventually strictly passive with respect to $\underset{\sim}{x}_0 \in \mathbb{R}^n$ if, and only if, there exists $k_0 > 0$ so that for all $\|\underset{\sim}{x}\| > k_0$[5]

---

[4] Resistor R may be a physical (n+1)-terminal element, or an n-port containing lumped (resistive) elements.

[5] The norm $\|\cdot\|$ we use in this paper is the Euclidean norm, $\|\underset{\sim}{x}_n\| = [(x_n^1)^2 + \ldots + (x_n^n)^2]^{1/2}$. Of course, the following results remain valid for any choice of norm in $\mathbb{R}^n$.

$$(\underset{\sim}{x}-\underset{\sim}{x}_0)^T \underset{\sim}{h}(\underset{\sim}{x}) > 0 \tag{11}$$

<u>Remark</u>: If $\underset{\sim}{x}_0 = \underset{\sim}{0}$, we say simply that $\underset{\sim}{h}$ is passive, strictly passive, or eventually strictly passive. Also, note in (i) and (ii) that $[\underset{\sim}{h}(\cdot)$ continuous$] \Rightarrow [\underset{\sim}{h}(\underset{\sim}{x}_0) = \underset{\sim}{0}]$.

<u>Def. 3</u>: [20] Let $D \subseteq \mathbb{R}^n$ be convex. The function $\underset{\sim}{h}$: $\mathbb{R}^n \to \mathbb{R}^n$ is

(i) <u>increasing</u> on D if, and only if, for all $\underset{\sim}{x}', \underset{\sim}{x}'' \in D$

$$(\underset{\sim}{x}'-\underset{\sim}{x}'')^T(\underset{\sim}{h}(\underset{\sim}{x}')-\underset{\sim}{h}(\underset{\sim}{x}'')) \geq 0 \tag{12}$$

(ii) <u>strictly increasing</u> on D if, and only if, the left side of (12) is positive for all $\underset{\sim}{x}' \neq \underset{\sim}{x}''$

(iii) <u>uniformly increasing</u> on D if, and only if, there exists $\gamma > 0$ such that for all $\underset{\sim}{x}'$, $\underset{\sim}{x}'' \in D$

$$(\underset{\sim}{x}'-\underset{\sim}{x}'')^T(\underset{\sim}{h}(\underset{\sim}{x}')-\underset{\sim}{h}(\underset{\sim}{x}'')) \geq \gamma\|\underset{\sim}{x}'-\underset{\sim}{x}''\|^2 \tag{13}$$

There are two more definitions which are of interest:

<u>Def. 4</u>: [21] For any integer $\mu \geq 0$, $\underset{\sim}{h}$: $\mathbb{R}^n \to \mathbb{R}^n$ is a <u>C^μ-diffeomorphism</u> on $\mathbb{R}^n$ (or is a C^μ-diffeomorphic function on $\mathbb{R}^n$) if, and only if, $\underset{\sim}{h}$ is injective on $\mathbb{R}^n$, and the functions $\underset{\sim}{h}, \underset{\sim}{h}^{-1}$ are C^μ. Furthermore, $\underset{\sim}{h}$ is a C^μ-diffeomorphism mapping $\mathbb{R}^n$ <u>onto</u> $\mathbb{R}^n$ if, and only if, $\underset{\sim}{h}$ is a C^μ-diffeomorphism and $\underset{\sim}{h}$ is surjective.

<u>Def 5</u>: [11] The C^1-function $\underset{\sim}{h}$: $\mathbb{R}^n \to \mathbb{R}^n$ is a <u>state function</u> if, and only if, its Jacobian $\frac{\partial \underset{\sim}{h}(\underset{\sim}{x})}{\partial \underset{\sim}{x}}$ is symmetric for all $\underset{\sim}{x} \in \mathbb{R}^n$.

The following theorem summarizes the important facets of these definitions. Its proof, together with a discussion, is given in the

Appendix.

Theorem A:

A-1. [20] The C^1-function $\underset{\sim}{h}$: $\mathbb{R}^n \to \mathbb{R}^n$ is

(i) increasing in $\mathbb{R}^n$ if, and only if, $\frac{\partial \underset{\sim}{h}(\underset{\sim}{x})}{\partial \underset{\sim}{x}}$ is positive-semi-definite[6] for all $\underset{\sim}{x} \in \mathbb{R}^n$

(ii) strictly increasing on $\mathbb{R}^n$ if $\frac{\partial \underset{\sim}{h}(\underset{\sim}{x})}{\partial \underset{\sim}{x}}$ is positive-definite[6] for all $\underset{\sim}{x} \in \mathbb{R}^n$.

(iii) uniformly increasing on $\mathbb{R}^n$ if, and only if, for some $\lambda > 0$, $\left[\frac{\partial \underset{\sim}{h}(\underset{\sim}{x})}{\partial \underset{\sim}{x}} - \lambda \underset{\sim}{1}_n\right]$ is positive definite for all $\underset{\sim}{x} \in \mathbb{R}^n$, where $\underset{\sim}{1}_n$ is the $n \times n$ identity matrix.

A-2. [21] For any integer $\mu \geq 1$, $\underset{\sim}{h}$: $\mathbb{R}^n \to \mathbb{R}^n$ is a C^μ-diffeomorphism mapping $\mathbb{R}^n$ onto $\mathbb{R}^n$ if, and only if, the C^μ-function $\underset{\sim}{h}$ has a nonsingular Jacobian everywhere on $\mathbb{R}^n$, and $\lim_{\|\underset{\sim}{x}\| \to \infty} \|\underset{\sim}{h}(\underset{\sim}{x})\| = +\infty$.

A-3. (i) If $\underset{\sim}{h}$: $\mathbb{R}^n \to \mathbb{R}^n$ is continuous and strictly increasing on $\mathbb{R}^n$, it is a C^0-diffeomorphism (also called a homeomorphism) on $\mathbb{R}^n$.

(ii) for any integer $\mu \geq 0$, if $\underset{\sim}{h}$: $\mathbb{R}^n \to \mathbb{R}^n$ is a C^μ-uniformly-increasing function on $\mathbb{R}^n$, it is a C^μ-diffeomorphism mapping $\mathbb{R}^n$ onto $\mathbb{R}^n$.

A-4. If the C^1-function $\underset{\sim}{h}$: $\mathbb{R}^n \to \mathbb{R}^n$ is either

(a) uniformly increasing on $\mathbb{R}^n$

or else

(b) a C^1-strictly-increasing diffeomorphic state function mapping $\mathbb{R}^n$ onto $\mathbb{R}^n$

---

[6] $\underset{\sim}{A} \in \mathbb{R}^{n \times n}$ is positive semi-definite (resp., positive definite) if, and only if, $\underset{\sim}{x}^T \underset{\sim}{A} \underset{\sim}{x} \geq 0$ (resp., >0) for all $\underset{\sim}{x} \neq \underset{\sim}{0}$.

then $\underset{\sim}{h}$ is <u>eventually</u> <u>strictly</u> <u>passive</u>, and

$$\lim_{\|\underset{\sim}{x}\|\to\infty} \frac{1}{\|\underset{\sim}{x}\|} \underset{\sim}{x}^T \underset{\sim}{h}(\underset{\sim}{x}) = +\infty \tag{14}$$

While we are interested in the properties of n_p-ports and the functions $\underset{\sim}{g}_p(\cdot)$ in (6) and (7), at times we will use the following theorem which guarantees that Eqs. (6) and (7) exist:

<u>Theorem B</u>: [4], [5] Let n_p-port N contain resistors, and independent voltage and current sources. For any integer $\mu \geq 0$, (6) describing N exists, and $\underset{\sim}{g}_p(\cdot,\cdot)$ is a C^μ-function if

(i) There is no loop formed exclusively by voltage-driven ports of N and independent voltage sources. There is no cutset formed exclusively by current-driven ports of N and independent current sources.

(ii) Each resistor of N is described by its constitutive relation (4), where $g_R^\alpha(\cdot)$ is a C^μ-strictly-increasing diffeomorphism mapping $\mathbb{R}^{n_\alpha}$ onto $\mathbb{R}^{n_\alpha}$ for each $\alpha = 1,2,\ldots,m_R$.

III. <u>Properties of Resistive n_p-Ports</u>

Let N of Fig. 1 be an n_p-port containing resistors only; it is described by (7). We shall prescribe conditions under which N has the properties of Defs. 1, 2 and 3. In the following section, we see how the addition of independent sources affects these properties. We begin with

<u>Theorem 1</u>: Let N be a resistive n_p-port described by (7); namely, $\underset{\sim}{y}_p = -\underset{\sim}{g}_p(\underset{\sim}{x}_p)$. Both of the following statements are true:

(i) If each internal resistor R^α is a passive resistor, then $\underset{\sim}{g}_p(\cdot)$ is passive.

(ii) If each internal resistor R^α is an increasing resistor, then

$\underset{\sim}{g}_p(\cdot)$ is increasing.

Remarks: 1. In the proof we show that the hypothesis "each internal resistor is passive or increasing" implies that N is passive or increasing using Def. 1, or, equivalently, when each resistor is described by its constitutive relation, we show that the hypothesis "$\underset{\sim}{g}_R(\cdot)$ is passive or increasing" implies that $\underset{\sim}{g}_p$ is passive or increasing using Def. 2.

2. The conclusion that N is passive if (i) is true, or N is increasing if (ii) is true, holds even if no equation of the form (7) is valid, or if there is no equation of the form (4) describing the resistors.

Proof: (i) we will show $\underset{\sim}{g}_p(\cdot)$ is passive.

First,

$$\underset{\sim}{x}_p^T \underset{\sim}{g}_p(\underset{\sim}{x}_p) = -\underset{\sim}{x}_p^T \underset{\sim}{y}_p = -\underset{\sim}{v}_p^T \underset{\sim}{i}_p, \qquad \forall\ \underset{\sim}{x}_p \tag{15}$$

where the last inequality comes from the fact that for each port k, $k = 1,\ldots,n_p$, $v_p^k i_p^k = x_p^k y_p^k$.

Next, using Tellegen's Theorem

$$\underset{\sim}{v}_p^T \underset{\sim}{i}_p + \underset{\sim}{v}_R^T \underset{\sim}{i}_R = 0 \qquad \forall\ (\underset{\sim}{v}_p, \underset{\sim}{i}_p) \tag{16a}$$

or

$$-\underset{\sim}{v}_p^T \underset{\sim}{i}_p = \underset{\sim}{v}_R^T \underset{\sim}{i}_R \qquad \forall\ (\underset{\sim}{v}_p, \underset{\sim}{i}_p) \tag{16b}$$

where $\underset{\sim}{v}_R, \underset{\sim}{i}_R \in \mathbb{R}^{n_R}$ represent the resistor voltages and currents.

Now, for each n_α-port resistor R^α, the function $\underset{\sim}{g}_R^\alpha(\cdot)$ is passive, by hypothesis, (or, if $\underset{\sim}{g}_R^\alpha(\cdot)$ does not exist, R^α is passive via Def. 1;

this does not affect the following conclusion); hence

$$(\underset{\sim}{v}_R^\alpha)^T(\underset{\sim}{i}_R^\alpha) = (\underset{\sim}{x}_R^\alpha)^T(\underset{\sim}{y}_R^\alpha) = (\underset{\sim}{x}_R^\alpha)^T(\underset{\sim}{g}(\underset{\sim}{x}_R^\alpha)) \geq 0, \qquad \forall \begin{pmatrix} \underset{\sim}{v}_R^\alpha \\ \underset{\sim}{i}_R^\alpha \end{pmatrix} \tag{17a}$$

and

$$\underset{\sim}{v}_R^T \underset{\sim}{i}_R \geq 0, \qquad \forall \begin{pmatrix} \underset{\sim}{v}_R \\ \underset{\sim}{i}_R \end{pmatrix} \tag{17b}$$

Combining (15), (16b), and (17b), we obtain

$$\underset{\sim}{x}_p^T \underset{\sim}{g}_p(\underset{\sim}{x}_p) = -\underset{\sim}{v}_p^T \underset{\sim}{i}_p = \underset{\sim}{v}_R^T \underset{\sim}{i}_R \geq 0, \qquad \forall\ \underset{\sim}{x}_p \tag{18}$$

(ii) The proof that $\underset{\sim}{g}_p(\cdot)$ is increasing when the resistors are increasing is similar conceptually to the proof above. The notation, however, is more involved. First, for any $\underset{\sim}{x}_p'$ and $\underset{\sim}{x}_p'' \in \mathbb{R}^{n_p}$

$$\begin{aligned}
[\underset{\sim}{x}_p' - \underset{\sim}{x}_p'']^T[\underset{\sim}{g}_p(\underset{\sim}{x}_p') - \underset{\sim}{g}_p(\underset{\sim}{x}_p'')] &= (\underset{\sim}{x}_p')^T \underset{\sim}{g}_p(\underset{\sim}{x}_p') + (\underset{\sim}{x}_p'')^T \underset{\sim}{g}_p(\underset{\sim}{x}_p'') \\
&\quad - (\underset{\sim}{x}_p')^T \underset{\sim}{g}_p(\underset{\sim}{x}_p'') - (\underset{\sim}{x}_p'')^T \underset{\sim}{g}_p(\underset{\sim}{x}_p') \\
&= -(\underset{\sim}{x}_p')^T \underset{\sim}{y}_p' - (\underset{\sim}{x}_p'')^T \underset{\sim}{y}_p'' + (\underset{\sim}{x}_p')^T \underset{\sim}{y}_p'' + (\underset{\sim}{x}_p'')^T \underset{\sim}{y}_p'
\end{aligned} \tag{19}$$

Now, for each port k, $k = 1,2,\ldots,n_p$, whether port k is voltage-driven or current driven,

$$(x_p^k)'(y_p^k)'' + (x_p^k)''(y_p^k)' = (v_p^k)'(i_p^k)'' + (v_p^k)''(i_p^k)' \tag{20}$$

Using (15), (19) and (20), we obtain

$$[\underset{\sim}{x}_p' - \underset{\sim}{x}_p'']^T[\underset{\sim}{g}_p(\underset{\sim}{x}_p') - \underset{\sim}{g}_p(\underset{\sim}{x}_p'')] = -[\underset{\sim}{v}_p' - \underset{\sim}{v}_p'']^T[\underset{\sim}{i}_p' - \underset{\sim}{i}_p''] \tag{21}$$

Next, using Tellegen's Theorem, since $\begin{pmatrix} \underset{\sim}{v}_p \\ \underset{\sim}{v}_R \end{pmatrix}'$, $\begin{pmatrix} \underset{\sim}{v}_p \\ \underset{\sim}{v}_R \end{pmatrix}''$ satisfy KVL, and $\begin{pmatrix} \underset{\sim}{i}_p \\ \underset{\sim}{i}_R \end{pmatrix}'$, $\begin{pmatrix} \underset{\sim}{i}_p \\ \underset{\sim}{i}_R \end{pmatrix}''$ satisfy KCL, we get the following four equations of the form (16b):

$$\begin{aligned} -(\underset{\sim}{v}_p')^T(\underset{\sim}{i}_p') &= (\underset{\sim}{v}_R')^T(\underset{\sim}{i}_R') \\ -(\underset{\sim}{v}_p')^T(\underset{\sim}{i}_p'') &= (\underset{\sim}{v}_R')^T(\underset{\sim}{i}_R'') \\ -(\underset{\sim}{v}_p'')^T(\underset{\sim}{i}_p') &= (\underset{\sim}{v}_R'')^T(\underset{\sim}{i}_R') \\ -(\underset{\sim}{v}_p'')^T(\underset{\sim}{i}_p'') &= (\underset{\sim}{v}_R'')^T(\underset{\sim}{i}_R'') \end{aligned} \tag{22}$$

Thus

$$-[\underset{\sim}{v}_p' - \underset{\sim}{v}_p'']^T[\underset{\sim}{i}_p' - \underset{\sim}{i}_p''] = [\underset{\sim}{v}_R' - \underset{\sim}{v}_R'']^T[\underset{\sim}{i}_R' - \underset{\sim}{i}_R''] \tag{23}$$

Finally, for each n_α-port resistor R^α, the function $g_R^\alpha(\cdot)$ is increasing (or, if $g_R^\alpha(\cdot)$ does not exist, R^α is increasing via Def. 1; this does not alter the following conclusion); hence for any $(\underset{\sim}{v}_R^\alpha, \underset{\sim}{i}_R^\alpha)'$ and $(\underset{\sim}{v}_R^\alpha, \underset{\sim}{i}_R^\alpha)''$, we have

$$[(\underset{\sim}{v}_R^\alpha)' - (\underset{\sim}{v}_R^\alpha)'']^T[(\underset{\sim}{i}_R^\alpha)' - (\underset{\sim}{i}_R^\alpha)''] = [(\underset{\sim}{x}_R^\alpha)' - (\underset{\sim}{x}_R^\alpha)'']^T[(\underset{\sim}{y}_R^\alpha)' - (\underset{\sim}{y}_R^\alpha)''] \geq 0 \tag{24}$$

where we obtain the inequality of (24) in the same way we obtain (21). It follows from (24) that for all $(\underset{\sim}{v}_R, \underset{\sim}{i}_R)'$ and $(\underset{\sim}{v}_R, \underset{\sim}{i}_R)''$, we have

$$[\underset{\sim}{v}_R' - \underset{\sim}{v}_R'']^T[\underset{\sim}{i}_R' - \underset{\sim}{i}_R''] \geq 0 \tag{25}$$

Combining (21), (23) and (25), we obtain for all x_p', $x_p'' \in \mathbb{R}^{n_p}$

$$[\underset{\sim}{x}_p' - \underset{\sim}{x}_p'']^T[\underset{\sim}{g}_p(\underset{\sim}{x}_p') - \underset{\sim}{g}_p(\underset{\sim}{x}_p'')] \geq 0 \qquad \blacksquare \tag{26}$$

Theorem 1 is used in [12] and [13] to derive a number of important properties of dynamic nonlinear networks. For example, it is shown in [12] that if strictly increasing capacitors and inductors are attached to the ports of a <u>passive</u> n_p-port N resulting in a network $\mathcal{N}$ described by (8), then all voltage and current waveforms of the network are bounded.

If $\underset{\sim}{g}_p(\cdot)$ has some of the other properties of Def. 2, we can obtain the following even more useful results [12]: If we attach strictly increasing capacitors and inductors to n_p-port N described by (7), then for the resulting network $\mathcal{N}$ described by (8):

(i) if $\underset{\sim}{g}_p(\cdot)$ is <u>strictly</u> passive, all current and voltage waveforms go to 0 as $t \to \infty$.

(ii) if $\underset{\sim}{g}_p(\cdot)$ is strictly increasing, the network has a (unique) globally asymptotically stable equilibrium point.

(iii) if $\mathcal{N}$ is described by (6) and $\underset{\sim}{g}_p(\cdot,\underset{\sim}{u}_S)$ is eventually strictly passive for all $\underset{\sim}{u}_S \in \mathbb{R}^{n_s}$, then for any set of bounded, continuous sources, all voltage and current waveforms are <u>eventually uniformly bounded</u>.[7]

In addition, if the sources are T-periodic (i.e., periodic with period T), $\mathcal{N}$ has a T-periodic set of voltage and current waveforms [13]. The additional "strictly" hypothesis motivates the following conjecture:

<u>Conjecture 1</u>: If the resistor functions $\underset{\sim}{g}_R^{\alpha}(\cdot)$ of resistive n_p-port N are strictly passive (resp., strictly increasing, eventually

---

[7] This means that there exists $k > 0$ so that for any set of voltage and current waveforms $(\underset{\sim}{v}(t),\underset{\sim}{i}(t))$ of N there exists $t_0 \geq 0$ such that $\left\|\begin{pmatrix}\underset{\sim}{v}(t)\\ \underset{\sim}{i}(t)\end{pmatrix}\right\| \leq k,\ \forall\ t \geq t_0$.

strictly passive) then $\underset{\sim}{g}_p(\cdot)$ describing N in (7) is strictly passive (resp., strictly increasing, eventually strictly passive).

We will show that this conjecture is false with the help of the three-port counterexample in Fig. 3.

<u>Remarks</u>: 1. This counterexample would work just as well if the resistors are nonlinear; e.g., we replace linear resistor R^1 with a diode described by $i = I_s\,(e^{v/v_T}-1)$.

2. We will show that the three-port containing strictly passive internal resistors is not strictly passive. In the same way, it follows that the three-port is not strictly increasing and is not eventually strictly passive although the internal resistors have these properties.

Suppose ports 1 and 2 are voltage-driven and port 3 is current-driven, then

$$\underset{\sim}{x}_p = \begin{pmatrix} v_p^1 \\ v_p^2 \\ i_p^3 \end{pmatrix}; \quad \underset{\sim}{y}_p = \begin{pmatrix} i_p^1 \\ i_p^2 \\ v_p^3 \end{pmatrix} \tag{27}$$

and

$$\begin{pmatrix} i_p^1 \\ i_p^2 \\ v_p^3 \end{pmatrix} = \underset{\sim}{y}_p = -\underset{\sim}{g}_p(\underset{\sim}{x}_p) = -\begin{bmatrix} \frac{1}{R^1}+\frac{1}{R^3} & \frac{1}{R^3} & 1 \\ \frac{1}{R^3} & \frac{1}{R^2}+\frac{1}{R^3} & 1 \\ -1 & -1 & 0 \end{bmatrix} \begin{pmatrix} v_p^1 \\ v_p^2 \\ i_p^3 \end{pmatrix} \tag{28}$$

The function $\underset{\sim}{g}_p(\cdot)$ is <u>not</u> strictly passive. Indeed, if we choose $v_p^1 = v_p^2 = 0$, and $i_p^3 = I_0$, where I_0 is any constant, then

$$\underset{\sim}{v}_p = \begin{pmatrix} 0 \\ 0 \\ 0 \end{pmatrix} \; ; \quad \underset{\sim}{i}_p = \begin{pmatrix} -I_0 \\ -I_0 \\ I_0 \end{pmatrix} \; ; \quad \underset{\sim}{x}_p = \begin{pmatrix} 0 \\ 0 \\ I_0 \end{pmatrix} \; ; \quad \underset{\sim}{y}_p = \begin{pmatrix} -I_0 \\ -I_0 \\ 0 \end{pmatrix} \tag{29}$$

and $\underset{\sim}{x}_p^T \underset{\sim}{g}_p(\underset{\sim}{x}_p) = 0$. Hence, this three-port is not <u>strictly passive</u>. In order to uncover the conditions under which an n-port containing <u>strictly</u> passive resistor is itself strictly passive, let us derive first the following results:

<u>Theorem 2a</u>: Let N be a resistive n_p-port with internal resistor voltages and currents $\begin{pmatrix} \underset{\sim}{v}_R \\ \underset{\sim}{i}_R \end{pmatrix} \in \mathbb{R}^{2n_R}$, and port voltages and currents $\begin{pmatrix} \underset{\sim}{v}_p \\ \underset{\sim}{i}_p \end{pmatrix} \in \mathbb{R}^{2n_p}$. <u>Assume there is no loop and no cutset formed exclusively by the ports</u>. Then there is a matrix $\underset{\sim}{P} \in \mathbb{R}^{2n_p \times 2n_R}$ whose elements are +1, -1, and 0, and each row of $\underset{\sim}{P}$ has at least one non-zero element, so that for every admissible $\begin{pmatrix} \underset{\sim}{v}_p \\ \underset{\sim}{i}_p \end{pmatrix}$ and every corresponding $\begin{pmatrix} \underset{\sim}{v}_R \\ \underset{\sim}{i}_R \end{pmatrix}$

$$\begin{pmatrix} \underset{\sim}{v}_p \\ \underset{\sim}{i}_p \end{pmatrix} = \underset{\sim}{P} \begin{pmatrix} \underset{\sim}{v}_R \\ \underset{\sim}{i}_R \end{pmatrix} \tag{30}$$

Furthermore, for every pair of admissible port variables $\begin{pmatrix} \underset{\sim}{v}_p \\ \underset{\sim}{i}_p \end{pmatrix}'$ and $\begin{pmatrix} \underset{\sim}{v}_p \\ \underset{\sim}{i}_p \end{pmatrix}''$, and for every corresponding pair of resistor variables $\begin{pmatrix} \underset{\sim}{v}_R \\ \underset{\sim}{i}_R \end{pmatrix}'$ and $\begin{pmatrix} \underset{\sim}{v}_R \\ \underset{\sim}{i}_R \end{pmatrix}''$, we have

$$\left[\begin{pmatrix} \underset{\sim}{v}_R \\ \underset{\sim}{i}_R \end{pmatrix}' = \begin{pmatrix} \underset{\sim}{v}_R \\ \underset{\sim}{i}_R \end{pmatrix}'' \right] \Rightarrow \left[\begin{pmatrix} \underset{\sim}{v}_p \\ \underset{\sim}{i}_p \end{pmatrix}' = \begin{pmatrix} \underset{\sim}{v}_p \\ \underset{\sim}{i}_p \end{pmatrix}'' \right] \tag{31}$$

and for

$$k \triangleq \|\underset{\sim}{P}\| > 0 \tag{32}$$

where $\|\underset{\sim}{P}\|$ is the <u>matrix norm</u> of $\underset{\sim}{P}$ induced by the Euclidean vector norm, we have

$$\left\| \begin{pmatrix} \underset{\sim}{v}_p \\ \underset{\sim}{i}_p \end{pmatrix} \right\| \leq k \left\| \begin{pmatrix} \underset{\sim}{v}_R \\ \underset{\sim}{i}_R \end{pmatrix} \right\| \tag{33a}$$

and

$$\left\| \begin{pmatrix} \underset{\sim}{v}_p \\ \underset{\sim}{i}_p \end{pmatrix}' - \begin{pmatrix} \underset{\sim}{v}_p \\ \underset{\sim}{i}_p \end{pmatrix}'' \right\| \leq k \left\| \begin{pmatrix} \underset{\sim}{v}_R \\ \underset{\sim}{i}_R \end{pmatrix}' - \begin{pmatrix} \underset{\sim}{v}_R \\ \underset{\sim}{i}_R \end{pmatrix}'' \right\| \tag{33b}$$

Remark: Equation (30) expresses the important property that each external port variable of N is linearly dependent on the internal variables of N. This property is far from obvious because in general, each port voltage (resp., current) will form loops (resp., cutsets) with both internal resistors as well as other external ports. Furthermore, this conclusion is very general in the sense that

1. It is not necessary that the resistors be described by constitutive relations such as (4). So, for example, there may be more than one possible resistor current vector $\underset{\sim}{i}_R$ for a resistor voltage vector $\underset{\sim}{v}_R$. Similarly, it is not necessary that N have a constitutive relation of the form (7).

2. Equation (30) is independent of the constitutive relation of the internal elements. In fact, (30) represents any N with arbitrary resistors so long as the graph $\mathcal{G}$ of N does not change.

3. There can be more than one $\begin{pmatrix} \underset{\sim}{v}_R \\ \underset{\sim}{i}_R \end{pmatrix}$ corresponding to an admissible $\begin{pmatrix} \underset{\sim}{v}_p \\ \underset{\sim}{i}_p \end{pmatrix}$.

4. As will be seen in the proof, the matrix $\underset{\sim}{P}$ in (30) is not necessarily unique. However, the linear mapping $\begin{pmatrix} \underset{\sim}{v}_R \\ \underset{\sim}{i}_R \end{pmatrix} \mapsto \begin{pmatrix} \underset{\sim}{v}_p \\ \underset{\sim}{i}_p \end{pmatrix}$ prescribed in (30) is unique. That is, for any other matrix $\hat{\underset{\sim}{P}}$ such that an equation of the form (30) is true, $[\underset{\sim}{P}-\hat{\underset{\sim}{P}}] \begin{pmatrix} \underset{\sim}{v}_R \\ \underset{\sim}{i}_R \end{pmatrix} \equiv \underset{\sim}{0}$.

When the resistors are described by their constitutive relations $\underset{\sim}{g}_R^{\alpha}(\cdot)$ in (4), and N is described by $\underset{\sim}{g}_p(\cdot)$ in (7), we have the following extension of Theorem 2a:

Theorem 2b: Let N be a resistive n_p-port described by (7) where the resistors of N are described by (4). Assume there is no loop and there is no cutset formed exclusively by the ports. Then there is a matrix $\underset{\sim}{P}_1 \in \mathbb{R}^{n_p \times 2n_R}$ whose elements are +1, -1, and 0, and each row of $\underset{\sim}{P}_1$ has at least one non-zero element so that for every admissible independent port vector $\underset{\sim}{x}_p \in \mathbb{R}^{n_p}$ and for every corresponding set of independent and dependent internal resistor variables $\begin{pmatrix} \underset{\sim}{x}_R \\ \underset{\sim}{y}_R \end{pmatrix} \in \mathbb{R}^{2n_R}$, we have

$$\underset{\sim}{x}_p = \underset{\sim}{P}_1 \begin{pmatrix} \underset{\sim}{x}_R \\ \underset{\sim}{y}_R \end{pmatrix} \tag{34}$$

Furthermore, for every pair of independent port variables $\underset{\sim}{x}_p'$, $\underset{\sim}{x}_p''$ and every corresponding pair of independent and dependent internal resistor variables $\begin{pmatrix} \underset{\sim}{x}_R \\ \underset{\sim}{y}_R \end{pmatrix}'$, $\begin{pmatrix} \underset{\sim}{x}_R \\ \underset{\sim}{y}_R \end{pmatrix}''$, we have:

$$[\underset{\sim}{x}_R' = \underset{\sim}{x}_R''] \Rightarrow [\underset{\sim}{x}_p' = \underset{\sim}{x}_p''] \tag{35}$$

and for

$$k_1 \triangleq \|\underset{\sim}{P}_1\| > 0 \tag{36}$$

we have

$$\|\underset{\sim}{x}_p\| \leq k_1 \left\| \begin{pmatrix} \underset{\sim}{x}_R \\ \underset{\sim}{y}_R \end{pmatrix} \right\| \tag{37a}$$

and

$$\|\underset{\sim}{x}_p' - \underset{\sim}{x}_p''\| \leq k_1 \left\| \begin{pmatrix} \underset{\sim}{x}_R \\ \underset{\sim}{y}_R \end{pmatrix}' - \begin{pmatrix} \underset{\sim}{x}_R \\ \underset{\sim}{y}_R \end{pmatrix}'' \right\| \tag{37b}$$

Moreover, when each resistor function $\underset{\sim}{g}_R^{\alpha}(\cdot)$ is continuous, we have

$$\lim_{\|\underset{\sim}{x}_p\| \to \infty} \|\underset{\sim}{x}_R\| = +\infty \tag{38a}$$

that is, for every $\beta_1 > 0$, there exists $\beta_2 > 0$ so that

$$[\|\underset{\sim}{x}_p\| > \beta_2] \Rightarrow [\|\underset{\sim}{x}_R\| > \beta_1] \tag{38b}$$

<u>Remark</u>: Again in this theorem, there can be more than one $\begin{pmatrix} \underset{\sim}{x}_R \\ \underset{\sim}{y}_R \end{pmatrix}$ corresponding to $\underset{\sim}{x}_p$.

<u>Proof of Theorem 2a</u>:

If we show (30), we are through, for then (31) and (33a) follow directly. The constant k in (32) is positive since every row of $\underset{\sim}{P}$ has a non-zero element. Equation (33b) is also immediate since (30) is a linear equation. Let port j be any port, $j = 1,\ldots,n_p$. It forms no loop with the other ports, so via the <u>Colored Arc Corollary</u> (choose set A to be the set of port branches not including port j, and choose set C to be the set of internal resistor branches) we conclude that it forms a cutset exclusively with the resistors. It follows from KCL that there exists a row vector $\underset{\sim}{p}_j^i \in \mathbb{R}^{1\times n_R}$ containing elements +1, -1, and 0, such that

$$i_p^j = \underset{\sim}{p}_j^i \cdot \underset{\sim}{i}_R \tag{39a}$$

Row vector $\underset{\sim}{p}_j^i$ must contain a non-zero element, for otherwise port j forms a self-cutset, violating our hypothesis. Similarly, port j forms no cutset with the other ports. From the <u>Colored Arc Corollary</u>, we conclude that it forms a loop exclusively with resistors. If follows from KVL that there exists a row vector $\underset{\sim}{p}_j^v \in \mathbb{R}^{1\times n_R}$ containing elements

+1, -1, and 0, such that

$$v_p^j = \underset{\sim}{p}_j^v \cdot \underset{\sim}{v}_R \tag{39b}$$

where, as with $\underset{\sim}{p}_j^i$ above, $\underset{\sim}{p}_j^v$ has a non-zero element. Since (39) is true for all $j = 1,\ldots,n_p$, we formulate $\underset{\sim}{P}$ in (30) with the row vectors $\underset{\sim}{p}_j^i$, $\underset{\sim}{p}_j^v$, $j = 1,2,\ldots,n_p$. ∎

<u>Proof of Theorem 2b</u>:

The vector $\begin{pmatrix} \underset{\sim}{x}_p \\ \underset{\sim}{y}_p \end{pmatrix}$ may be obtained by simply reordering the vector $\begin{pmatrix} \underset{\sim}{v}_p \\ \underset{\sim}{i}_p \end{pmatrix}$. Similarly, $\begin{pmatrix} \underset{\sim}{x}_R \\ \underset{\sim}{y}_R \end{pmatrix}$ may be obtained by reordering $\begin{pmatrix} \underset{\sim}{v}_R \\ \underset{\sim}{i}_R \end{pmatrix}$. Thus, by deleting one-half of the rows of $\underset{\sim}{P}$ in (30) and by rearranging the columns of $\underset{\sim}{P}$, we obtain $\underset{\sim}{P}_1$ in (34). Then, (35), (36) and (37) follow from (34) in the same way that (31), (32) and (33) come from (30). We have only to show (38). Assume (38b) is false; then there exists $\hat{\beta}_1 > 0$ such that for every $\beta_2 > 0$ there exist $\underset{\sim}{x}_p \in \mathbb{R}^{n_p}$ and $\underset{\sim}{x}_R \in \mathbb{R}^{n_R}$ such that

$$\|\underset{\sim}{x}_p\| > \beta_2 \; ; \quad \|\underset{\sim}{x}_R\| \leq \hat{\beta}_1 \tag{40}$$

Since every $\underset{\sim}{g}_R^\alpha(\cdot)$ is continuous, the composite function $\underset{\sim}{g}_R(\cdot)$ $\left(\underset{\sim}{y}_R = \underset{\sim}{g}_R(\underset{\sim}{x}_R)\right)$ is continuous, and the continuous function

$$\|\underset{\sim}{y}_R\| = \|\underset{\sim}{g}_R(\cdot)\| \tag{41}$$

attains a maximum denoted by $\hat{\delta} > 0$ on the <u>compact</u> set $\{\underset{\sim}{x}_R : \|\underset{\sim}{x}_R\| \leq \hat{\beta}_1\}$. Thus, from (40) and (37a),

$$\left[\|\underset{\sim}{x}_R\|^2 < (\hat{\beta}_1)\right] \Rightarrow \left[\left\|\begin{pmatrix} \underset{\sim}{x}_R \\ \underset{\sim}{y}_R \end{pmatrix}\right\|^2 = \|\underset{\sim}{x}_R\|^2 + \|\underset{\sim}{y}_R\|^2 \leq (\hat{\beta}_1)^2 + (\hat{\delta})^2\right]$$

$$\Rightarrow \left[\|\underset{\sim}{x}_p\|^2 \leq k_1^2 \left((\hat{\beta}_1)^2 + (\hat{\delta})^2\right)\right] \tag{42}$$

which is a contradiction of (40) for arbitrarily large $\beta_2 > 0$. ∎

Example: A fourth resistor is attached to the three-port of Fig. 3 (see Fig. 4). The ports of this three port form no loops and form no cutsets. Hence from Theorem 2 we conclude that an equation of the form (30) exists. Indeed, we have

$$\begin{pmatrix} v_p^1 \\ v_p^2 \\ v_p^3 \\ i_p^1 \\ i_p^2 \\ i_p^3 \end{pmatrix} = \begin{bmatrix} 1 & 0 & 0 & 0 & 0 & 0 & 0 & 0 \\ 0 & 1 & 0 & 0 & 0 & 0 & 0 & 0 \\ 0 & 0 & 1 & 0 & 0 & 0 & 0 & 0 \\ 0 & 0 & 0 & 0 & -1 & 0 & 0 & 1 \\ 0 & 0 & 0 & 0 & 0 & -1 & 0 & 1 \\ 0 & 0 & 0 & 0 & 0 & 0 & -1 & 1 \end{bmatrix} \begin{pmatrix} v_R^1 \\ v_R^2 \\ v_R^3 \\ v_R^4 \\ i_R^1 \\ i_R^2 \\ i_R^3 \\ i_R^4 \end{pmatrix} \tag{43}$$

Moreover, as we shall show following Theorem 5, $\underset{\sim}{g}_p(\cdot)$ for this network is strictly passive and strictly increasing.

The converse of Theorem 2 is also true. That is, if there is a loop or cutset formed exclusively by the ports, then equation (30) is not true, and the remainder of the conclusions also do not hold. Indeed, as illustrated by the three-port of Fig. 3, if there is a loop of ports, there can be a "loop current" of the loop of ports which is not reflected in the resistor voltages and currents. To make this more explicit, we have

Theorem 3: Let N be a resistive n_p-port. Assume there is a loop and/or a cutset formed exclusively by the ports of N. Then there is a pair of port vectors $\begin{pmatrix} \underset{\sim}{v}_p \\ \underset{\sim}{i}_p \end{pmatrix}'$, $\begin{pmatrix} \underset{\sim}{v}_p \\ \underset{\sim}{i}_p \end{pmatrix}''$, and a pair of corresponding internal resistor vectors $\begin{pmatrix} \underset{\sim}{v}_R \\ \underset{\sim}{i}_R \end{pmatrix}'$, $\begin{pmatrix} \underset{\sim}{v}_R \\ \underset{\sim}{i}_R \end{pmatrix}''$ such that

$$\begin{pmatrix} \underset{\sim}{v}_R \\ \underset{\sim}{i}_R \end{pmatrix}' = \begin{pmatrix} \underset{\sim}{v}_R \\ \underset{\sim}{i}_R \end{pmatrix}'' \tag{44a}$$

but

$$\begin{pmatrix} \underset{\sim}{v}_p \\ \underset{\sim}{i}_p \end{pmatrix}' \neq \begin{pmatrix} \underset{\sim}{v}_p \\ \underset{\sim}{i}_p \end{pmatrix}'' \tag{44b}$$

Moreover, for any port j

$$\text{(i)} \qquad (v_p^j)' \neq (v_p^j)'' \tag{45}$$

only if port j is in a cutset of ports. Furthermore, if port j and port k are in this cutset and in no other cutset of ports, then

$$(v_p^j)' - (v_p^j)'' = \pm\, [(v_p^k)' - (v_p^k)''] \tag{46}$$

where the sign on the right side of (46) is <u>plus</u> if, and only if, port j and port k are <u>similarly directed</u> in the cutset.

$$\text{(ii)} \qquad (i_p^j)' \neq (i_p^j)'' \tag{47}$$

only if port j is in a loop of ports. Furthermore, if port j and port k are in this loop and each is in no other loop of ports, then

$$(i_p^j)' - (i_p^j)'' = \pm\, [(i_p^k)' - (i_p^k)''] \tag{48}$$

where the sign on the right side of (48) is plus if, and only if, port j and port k are similarly directed in the loop.

<u>Remark</u>: The expression on the left side of (48) can be interpreted as the "loop current" of the loop of ports. We require that ports j and k be in only one cutset of ports in (46) and in only one loop of ports in (48). Otherwise there might be more than one "cutset voltage" or "loop current" involved.

Proof: Assume there is a loop of ports (if there is no such loop, but there is a cutset of ports, the proof is conceptually identical). We represent this loop by the row vector $\underset{\sim}{b}_i \in \mathbb{R}^{1\times n_p}$. For any $\begin{pmatrix} \underset{\sim}{v}_p \\ \underset{\sim}{i}_p \end{pmatrix}' \in \mathbb{R}^{2n_p}$ and corresponding $\begin{pmatrix} \underset{\sim}{v}_R \\ \underset{\sim}{i}_R \end{pmatrix} \in \mathbb{R}^{2n_R}$, the vector

$$\begin{pmatrix} \underset{\sim}{v}_p \\ \underset{\sim}{i}_p \end{pmatrix}'' \triangleq \begin{pmatrix} \underset{\sim}{v}_p' \\ \underset{\sim}{i}_p' \end{pmatrix} + \begin{pmatrix} \underset{\sim}{0}_p \\ (\underset{\sim}{b}_i)^T \end{pmatrix} I_0 \tag{49}$$

is also an admissible port vector for any $I_0 \neq 0$, since KCL and KVL are satisfied. Furthermore, it has $\begin{pmatrix} \underset{\sim}{v}_R \\ \underset{\sim}{i}_R \end{pmatrix}'$ as the corresponding resistor vector. So (44a) is true.

The proof that (45) is true only if port j is in a cutset of ports, and that (47) is true only if port j is in a loop of ports, is precisely the same as the derivation of (30) in the proof of Theorem 2a.

We next show (46); the proof of (48) is identical. We apply the Colored Arc Corollary twice: First, since port j forms a cutset of ports, it does not form a loop with resistors. Second, since port j does not form a cutset of ports excluding port k, it forms a loop with port k and the resistors. This is possible if, and only if, port j and port k together form a loop with resistor. Then, from KVL and the fact that all internal resistor voltages are the same ($\underset{\sim}{v}_R' = \underset{\sim}{v}_R''$) we see that (46) is true. ∎

We next examine conditions for the inverse of Theorem 2, i.e., conditions for which $\begin{pmatrix} \underset{\sim}{v}_R \\ \underset{\sim}{i}_R \end{pmatrix}$ is a function of $\begin{pmatrix} \underset{\sim}{v}_p \\ \underset{\sim}{i}_p \end{pmatrix}$. Now, if there is no loop and no cutset of resistors, then we can write

$$\begin{pmatrix} \underset{\sim}{v}_R \\ \underset{\sim}{i}_R \end{pmatrix} = \underset{\sim}{\tilde{P}} \begin{pmatrix} \underset{\sim}{v}_p \\ \underset{\sim}{i}_p \end{pmatrix} \tag{50}$$

where $\tilde{\underset{\sim}{P}} \in \mathbb{R}^{2n_R \times 2n_p}$ has elements +1, -1, and 0. This equation is derived in the same way (30) is derived. Indeed, if we reverse the role of resistor and port, (30) becomes (50). However, in many n_p-ports the number of resistors is large compared to the number of ports, so the condition "the resistors form no loops and form no cutsets" is prohibitively strong. Also, we can use the constitutive relations of the resistors to obtain a better result. First, we examine a network where (30) does not have an inverse (see Fig. 5).

In this network, for

$$\begin{pmatrix} v_R^1 \\ v_R^2 \\ i_R^1 \\ i_R^2 \end{pmatrix}' = \begin{pmatrix} 1 \\ 1 \\ 3 \\ -1 \end{pmatrix} \neq \begin{pmatrix} 1 \\ 1 \\ 1 \\ 1 \end{pmatrix} = \begin{pmatrix} v_R^1 \\ v_R^2 \\ i_R^1 \\ i_R^2 \end{pmatrix}'' \tag{51}$$

we have

$$\begin{pmatrix} v_p \\ i_p \end{pmatrix}' = \begin{pmatrix} 1 \\ -2 \end{pmatrix} = \begin{pmatrix} v_p \\ i_p \end{pmatrix}'' \tag{52}$$

In the following theorem, we present a condition so that $\begin{pmatrix} \underset{\sim}{v}_R \\ \underset{\sim}{i}_R \end{pmatrix}$ is a function of $\begin{pmatrix} \underset{\sim}{v}_p \\ \underset{\sim}{i}_p \end{pmatrix}$. In presenting this theorem, it is convenient to view all resistors as one-port resistors possibly <u>coupled</u> to other one-port resistors. We make this concept of coupling explicit as follows:

<u>Def. 6</u>: Assume all resistor functions $\underset{\sim}{g}_R^{\alpha}(\cdot)$ of N are differentiable. In viewing all resistors as one-ports, we say that resistor k is coupled to resistor j if, and only if, $\frac{\partial y_R^j}{\partial x_R^k} \not\equiv 0$.

Theorem 4: Let the constitutive relation of each internal resistor of N be a C^{μ}-function $\underset{\sim}{g}_R^{\alpha}(\cdot)$, where $\mu \geq 1$. Then there is a C^{μ}-function

$\underset{\sim}{h}_N$ such that for every admissable port vector $\begin{pmatrix} \underset{\sim}{v}_p \\ \underset{\sim}{i}_p \end{pmatrix}$ and corresponding internal resistor vector $\begin{pmatrix} \underset{\sim}{v}_R \\ \underset{\sim}{i}_R \end{pmatrix}$ we have

$$\begin{pmatrix} \underset{\sim}{v}_R \\ \underset{\sim}{i}_R \end{pmatrix} = \underset{\sim}{h}_N \begin{pmatrix} \underset{\sim}{v}_p \\ \underset{\sim}{i}_p \end{pmatrix} \tag{53}$$

if the following condition is satisfied:

Let the resistors of N be modeled as coupled one-ports. Let $\mathcal{S}$ be any set of resistors so that any resistor in $\mathcal{S}$ forms a loop and/or forms a cutset exclusively with other resistors of $\mathcal{S}$. At least one of the following statements is true:

(a) There is a resistor R^j in $\mathcal{S}$ which forms a loop exclusively with resistors of $\mathcal{S}$ but does not form a cutset exclusively with the resistors of $\mathcal{S}$. Its independent variable is its voltage, and no resistor of $\mathcal{S}$ is coupled to it.[8]

(b) There is a resistor R^j in $\mathcal{S}$ which forms a cutset exclusively with resistors of $\mathcal{S}$ but does not form a loop exclusively with resistors of $\mathcal{S}$. Its independent variable is its current, and no resistor of $\mathcal{S}$ is coupled to it.

<u>Remark</u>: The condition of this theorem can be verified by inspec-

---

[8]Since other resistors may be coupled to R^j, its constitutive relation may depend on more than one independent variable; namely $y_R^j = g_R^j(x_R^1, \ldots, x_R^{n_R})$. Condition (a) requires $x_R^j = v_R^j$, $y_R^i = i_R^j$, and that for each $k = 1,2,\ldots,n_R$, $k \neq j$, $\frac{\partial y_R^j}{\partial x_R^k} \neq 0$ only if resistor variable x_R^k is that of a resistor <u>not</u> in $\mathcal{S}$. In the special case when R^j is an "uncoupled" two-terminal resistor, condition (a) is equivalent to requiring that R^j is a voltage-controlled resistor. A dual statement applies to condition (b).

tion (for example, the network of Fig. 5 violates the theorem because neither resistor is voltage-controlled). The following example illustrates the use and proof of the theorem. See also Corollary 1 for a stronger though more succinct condition.

<u>Example:</u> We will derive $\underset{\sim}{h}_N$ of (53) for the two-port of Fig. 6. In the two-port N of Fig. 6, assume resistor R^1 is current controlled $\left(v_R^1 = g_R^1(i_R^1)\right)$ and resistor R^4 is voltage-controlled $\left(i_R^4 = g_R^4(v_R^4)\right)$. We shall derive $\underset{\sim}{h}_N(\cdot)$ of (53); define set $\mathcal{S}_1 \triangleq \{R^1, R^2, R^3, R^4\}$. Here, every resistor of $\mathcal{S}_1$ forms a loop and/or forms a cutset exclusively with resistors of $\mathcal{S}_1$. Now, resistor R^1 is a current-controlled resistor which does not form a loop with resistors in $\mathcal{S}_1$ (condition (b)). It follows from the Colored Arc Corollary that R^1 must form a cutset with the ports. Indeed, port 1 and R^1 form a cutset, and

$$i_R^1 = -\, i_p^1 \;; \quad v_R^1 = g_R^1(-i_p^1) \tag{54}$$

Next, let $\mathcal{S}_2 = \{R^2, R^3, R^4\}$. Every resistor in $\mathcal{S}_2$ forms a loop with resistors of $\mathcal{S}_2$. The voltage-controlled resistor R^4 does not form a cutset with resistors in $\mathcal{S}_2$ (condition (a)), and, from the Colored Arc Corollary, it follows that R^4 forms a loop with the ports. Indeed, port 2 and R^4 form a loop, and

$$v_R^4 = v_p^2 \;; \quad i_R^4 = g_R^4(v_p^2) \tag{55}$$

Now, resistors R^2 and R^3 each form a loop and a cutset exclusively with the ports and with resistors R^1 and R^4. Using KVL and KCL

$$
\begin{aligned}
v_R^2 &= v_p^1 - v_{R_1} \\
v_R^3 &= v_p^1 - v_R^1 + v_R^4 \\
i_R^2 &= -i_p^1 + i_R^4 + i_p^2 \\
i_R^3 &= -i_R^4 - i_p^2
\end{aligned}
\tag{56}
$$

Combining these three equations, we obtain

$$
\begin{pmatrix} v_R^1 \\ v_R^2 \\ v_R^3 \\ v_R^4 \\ i_R^1 \\ i_R^2 \\ i_R^3 \\ i_R^4 \end{pmatrix} = \underset{\sim}{h}_N \begin{pmatrix} v_p^1 \\ v_p^2 \\ i_p^1 \\ i_p^2 \end{pmatrix} = \begin{pmatrix} g_R^1(-i_p^1) \\ v_p^1 - g_R^1(-i_p^1) \\ v_p^1 - g_R^1(-i_p^1) + v_p^2 \\ v_p^2 \\ -i_p^1 \\ -i_p^1 + g_R^4(v_p^2) + i_p^2 \\ -g_R^4(v_p^2) - i_p^2 \\ g_R^4(v_p^2) \end{pmatrix}
\tag{57}
$$

<u>Remark</u>: The continuity of $\underset{\sim}{h}_p(\cdot)$ in (57) is identical to the continuity of $g_R^1(\cdot)$ and $g_R^4(\cdot)$. Also, for this example, it is not necessary to describe R^2 and R^3 by constitutive relations.

<u>Proof of Theorem 4</u>: Let $\mathcal{S}_1$ be the (maximal) set of resistors so that a resistor is in $\mathcal{S}_1$ if, and only if, it is in a loop and/or in a cutset formed exclusively with other resistors of N. (In the previous example, $\mathcal{S}_1 = \{R^1, R^2, R^3, R^4\}$ contained all the resistors of N.) Let $\mathcal{S}_1^c$ be the resistors not in $\mathcal{S}_1$. Each resistor in $\mathcal{S}_1^c$ does not form a loop and does not form a cutset exclusively with resistors; thus from the Colored Arc Corollary, each resistor in $\mathcal{S}_1^c$ forms a loop and forms a cutset exclusively with the ports. Using KCL and KVL we con-

clude that the voltage and current of every resistor in $\mathcal{S}_1^c$ is a C^μ- (actually, C^∞-) function of the port voltages and currents.

Assume resistor $R^1 \in \mathcal{S}_1$ satisfies (a) of the theorem (if (b) is satisfied as in the example, the proof is identical). Using the Colored Arc Corollary, it forms a loop exclusively with the ports and resistors in $\mathcal{S}_1^c$. Its voltage therefore is a C^μ-function of voltages of the ports and voltages of resistors in $\mathcal{S}_1^c$; that is, its voltage is a C^μ-function of the port voltages. Since only resistors in $\mathcal{S}_1^c$ can be coupled to resistor R^1, its current is in general a C^μ-function of its voltage, and of voltages and currents of resistors in $\mathcal{S}_1^c$. Thus, the voltage and current of resistor $R^1 \in \mathcal{S}_1$ is a C^μ-function of port voltages and currents.

Let $\mathcal{S}_2 \subseteq \mathcal{S}_1$ be the set of resistors of N so that a resistor is in $\mathcal{S}_2$ if, and only if, it forms a loop and/or cutset with resistors <u>excluding resistor R^1</u>. Let $\mathcal{S}_2^c \supseteq \mathcal{S}_1^c$ be the remaining resistors of N. Any resistor other than R^1 in $\mathcal{S}_2^c$ and not in $\mathcal{S}_1^c$ forms a loop and forms a cutset exclusively with the ports, the resistors in $\mathcal{S}_1^c$, and R^1. Thus, the voltage and current of every resistor in $\mathcal{S}_2^c$ is a C^μ-function of port voltages and currents.

Assume resistor $R^2 \in \mathcal{S}_2$ satisfies (b) of the theorem. Using the dual of the analysis of $R^1 \in \mathcal{S}_1$ above, we conclude that the voltage and current of $R^2 \in \mathcal{S}_2$ is a C^μ-function of port voltages and currents.

We proceed in this way, forming $\mathcal{S}_3 \subseteq \mathcal{S}_2$, $\mathcal{S}_4 \subseteq \mathcal{S}_3$, etc. Each set $\mathcal{S}_j$ contains at least one element less than $\mathcal{S}_{j-1}$. The number of resistors is finite, so there is an integer $\ell \geq 1$, $n_p \geq \ell$, ($\ell = 2$ in the example) so that $\mathcal{S}_\ell$ contains no elements. Then, every resistor

of N is in $\mathcal{S}_\ell^c$ and $\begin{pmatrix} \underset{\sim}{v}_R \\ \underset{\sim}{i}_R \end{pmatrix}$ is a C^μ-function of $\begin{pmatrix} \underset{\sim}{v}_p \\ \underset{\sim}{i}_p \end{pmatrix}$. ∎

The following corollary prescribes a condition simpler than that of Theorem 4. However, it is stronger, especially when the number of resistors in n_p-port N is much larger than the number of ports.

<u>Corollary 1</u>: Let the constitutive relation of each resistor in N be represented by a C^μ-function $\underset{\sim}{g}_R^\alpha(\cdot)$, where $\mu \geq 1$. Then there is a C^μ-function $\underset{\sim}{h}_p$: $\mathbb{R}^{2n_p} \to \mathbb{R}^{2n_R}$ so that (53) is true if the following two conditions are satisfied:

(i) Each loop of resistors contains a voltage-controlled two-terminal resistor which is not in a cutset of resistors.

(ii) Each cutset of resistors contains a current-controlled two-terminal resistor which is not in a loop of resistors. ∎

We return to the study of properties of n_p-ports, applying the condition "the ports form no loops and form no cutsets" of Theorem 2. We start with

<u>Conjecture 2</u>: Assume each resistor function $\underset{\sim}{g}_R^\alpha(\cdot)$ of resistive n_p-port N is eventually strictly passive. Then the composite resistor function $\underset{\sim}{g}_R(\cdot) = [\underset{\sim}{g}_R^{1^T}(\cdot), \underset{\sim}{g}_R^{2^T}(\cdot), \cdots, \underset{\sim}{g}_R^{\alpha^T}(\cdot), \cdots \underset{\sim}{g}_R^{m_R^T}(\cdot)]^T$ is eventually strictly passive.

This conjecture is false. Assume N contains only the two resistors characterized by the $v_R^j - i_R^j$ curves in Fig. 7.

Resistor R^1 is eventually strictly passive and resistor R^2 is strictly passive. But, for the composite function $\underset{\sim}{g}_R(\cdot) = \begin{pmatrix} g_R^1(\cdot) \\ g_R^2(\cdot) \end{pmatrix}$, if we fix $v_R^1 = 3/2$, then for any $v_R^2 \in \mathbb{R}^1$,

$$\underset{\sim}{v}_R^T \underset{\sim}{g}_R(\underset{\sim}{v}_R) = (v_R^1, v_R^2)\begin{pmatrix} g_R^1(v_R^1) \\ g_R^2(v_R^2) \end{pmatrix} = v_R^1 g_R^1(v_R^1) + v_R^2\, g_R^2(v_R^2)$$

$$= \begin{cases} 3/2(-3/2) + (v_R^2)^2 \ , & |v_R^2| \le 1 \\ 3/2(-3/2) + \dfrac{1}{(v_R^2)^2} \ , & |v_R^2| > 1 \end{cases} \tag{58}$$

For any $v_R^2 \in \mathbb{R}^1$, the right side of (58) is negative; its largest value is $-5/4$. Thus, when $v_R^1 = 3/2$, $\underset{\sim}{v}_R^T \underset{\sim}{g}_R(\underset{\sim}{v}_R) < 0$ for arbitrarily large $\|\underset{\sim}{v}_R\|$.

The problem with the resistors of this example is that while $g_R^2(\cdot)$ is strictly passive, $v_R^2 \cdot i_R^2$ remains <u>bounded</u> as $|v_R^2| \to \infty$. That this is the key to the problem is shown in

<u>Lemma 1</u>: If each resistor function $\underset{\sim}{g}_R^\alpha(\cdot)$ is continuous, eventually strictly passive, and satisfies

$$\lim_{\|\underset{\sim}{x}_R^\alpha\| \to \infty} (\underset{\sim}{x}_R^\alpha)^T \underset{\sim}{g}_R^\alpha(\underset{\sim}{x}_R^\alpha) = +\infty \tag{59}$$

then $\underset{\sim}{g}_R(\cdot) = [\underset{\sim}{g}_R^{1\,T}(\cdot), \ldots, \underset{\sim}{g}_R^{m_R\,T}(\cdot)]^T$ is eventually strictly passive and satisfies

$$\lim_{\|\underset{\sim}{x}_R\| \to \infty} \underset{\sim}{x}_R^T \underset{\sim}{g}_R(\underset{\sim}{x}_R) = +\infty \tag{60}$$

<u>Remark</u>: Condition (59) is weak. For example, for one-dimensional resistor functions (59) is violated <u>only if</u> $\lim_{|x_R^\alpha| \to \infty} |g_R^\alpha(x_R^\alpha)| = 0$, as in the case of resistor R^2 in Fig. 7.

<u>Proof</u>: Since each $\underset{\sim}{g}_R^\alpha(\cdot)$ is continuous, eventually strictly passive, $(\underset{\sim}{x}_R^\alpha)^T \underset{\sim}{g}_R^\alpha(\underset{\sim}{x}_R^\alpha) < 0$ only for $\underset{\sim}{x}_R^\alpha$ in a compact set. Hence, there exists $k_1 > 0$ so that

$$(\underset{\sim}{x}_R^\alpha)^T \underset{\sim}{g}_R^\alpha(\underset{\sim}{x}_R^\alpha) \geq -\frac{k_1}{n_R} \qquad \forall\ \underset{\sim}{x}_R^\alpha \in \mathbb{R}^{n_\alpha} \qquad \forall\ \alpha = 1,2,\ldots,m_R \tag{61}$$

(Note that k_1 in (61) is the same for every α.) Next, because of (59), for every $k_2 > 0$, there exists $k_3 > 0$ so that

$$\left[\|\underset{\sim}{x}_R^\alpha\| > k_3\right] \Rightarrow \left[(\underset{\sim}{x}_R^\alpha)^T \underset{\sim}{g}_R^\alpha(\underset{\sim}{x}_R^\alpha) > k_1 + k_2\right] \qquad \forall\ \alpha = 1,\ldots,m_R \tag{62}$$

(again, note that k_2 in (62) is the same for every α; this is because the number m_R of resistors is finite). We are now ready to prove (60); we will show that for every $k_4 > 0$ there exists $k_5 > 0$ so that

$$\left[\|\underset{\sim}{x}_R\| > k_5\right] \Rightarrow \left[\underset{\sim}{x}_R^T \underset{\sim}{g}_R(\underset{\sim}{x}_R) > k_4\right] \tag{63}$$

Pick in (63)

$$k_4 = k_2; \quad k_5 = \sqrt{n_R}\, k_3 \tag{64}$$

If $\|\underset{\sim}{x}_R\| > k_5 = \sqrt{n_R}\, k_3$, then there is at least one component x_R^j of the vector $\underset{\sim}{x}_R \in \mathbb{R}^{n_R}$ so that $|x_R^j| > \frac{k_5}{\sqrt{n_R}} = k_3$. This component x_R^j is also a component of a resistor vector $\underset{\sim}{x}_R^\alpha$ for some α and $\|\underset{\sim}{x}_R^\alpha\| \geq |x_R^j| > k_3$. So, using (61), (62) and (64)

$$\begin{aligned}
&\underset{\sim}{x}_R^T \underset{\sim}{g}_R(\underset{\sim}{x}_R) \\
&= (\underset{\sim}{x}_R^\alpha)^T \underset{\sim}{g}_R^\alpha(\underset{\sim}{x}_R^\alpha) + \sum_{\substack{\ell=1 \\ \ell\neq\alpha}}^{m_R} (\underset{\sim}{x}_R^\ell) \underset{\sim}{g}_R^\ell(\underset{\sim}{x}_R^\ell) \\
&\geq (\underset{\sim}{x}_R^\alpha)^T \underset{\sim}{g}_R^\alpha(\underset{\sim}{x}_R^\alpha) - \frac{k_1}{n_R}(n_R - n_\alpha) \\
&> (\underset{\sim}{x}_R^\alpha)^T \underset{\sim}{g}_R^\alpha(\underset{\sim}{x}_R^\alpha) - k_1
\end{aligned}$$

$$> k_1 + k_2 - k_1$$

$$= k_2 = k_4 \qquad \forall \|\underset{\sim}{x}_R\| > k_5 \qquad \blacksquare \tag{65}$$

We are now ready to state when Conjecture 1 is valid.

<u>Theorem 5</u> Let N be a resistive n_p-port described by (7), namely, $\underset{\sim}{y}_p = -\underset{\sim}{g}_p(\underset{\sim}{x}_p)$, and each internal resistor R^α is described by its constitutive relation (4); namely, $\underset{\sim}{y}_R^\alpha = \underset{\sim}{g}_R^\alpha(\underset{\sim}{x}_R^\alpha)$.

If there is no loop and no cutset formed exclusively by the ports, then the following statements are true:

(i) If each $\underset{\sim}{g}_R^\alpha(\cdot)$ is strictly passive, then $\underset{\sim}{g}_p(\cdot)$ is strictly passive.

(ii) If each $\underset{\sim}{g}_R^\alpha(\cdot)$ is strictly increasing, then $\underset{\sim}{g}_p(\cdot)$ is strictly increasing.

(iii) If each $\underset{\sim}{g}_R^\alpha(\cdot)$ is eventually strictly passive, continuous, and satisfies (59), then $\underset{\sim}{g}_p(\cdot)$ is eventually strictly passive and satisfies

$$\lim_{\|\underset{\sim}{x}_p\| \to \infty} \underset{\sim}{x}_p^T \underset{\sim}{g}_p(\underset{\sim}{x}_p) = +\infty \tag{66}$$

<u>Proof</u>: It suffices to prove (ii) and (iii) since the proof of (i) is similar to the proof of (ii).

(ii) In the proof of Theorem 1, we showed that for any pair $\underset{\sim}{x}_p'$, $\underset{\sim}{x}_p''$ and any corresponding pair $\underset{\sim}{x}_R'$, $\underset{\sim}{x}_R''$,

$$[\underset{\sim}{x}_p' - \underset{\sim}{x}_p'']^T[\underset{\sim}{g}_p(\underset{\sim}{x}_p') - \underset{\sim}{g}_p(\underset{\sim}{x}_p'')] = [\underset{\sim}{x}_R' - \underset{\sim}{x}_R'']^T[\underset{\sim}{g}_R(\underset{\sim}{x}_R') - \underset{\sim}{g}_R(\underset{\sim}{x}_R'')] \tag{67}$$

Now, since the resistors are strictly increasing, the right side of (67) is positive for all $\underset{\sim}{x}_R' \neq \underset{\sim}{x}_R''$. Since there is no loop and no cutset

of ports, using (31) of Theorem 2, (67) is positive for all $\underset{\sim}{x}_p' \neq \underset{\sim}{x}_p''$.

(iii) Again, as in Theorem 1,

$$\underset{\sim}{x}_p^T \underset{\sim}{g}_p(\underset{\sim}{x}_p) = \underset{\sim}{x}_R^T \underset{\sim}{g}_R(\underset{\sim}{x}_R) \tag{68}$$

where, because of the previous Lemma, the right side of (68) tends to $+\infty$ as $\|\underset{\sim}{x}_R\| \to \infty$ (this is (60)). Then, using (38a) of Theorem 2, (66) is true. ∎

<u>Remark</u>: From Theorem A-4, we know that if each $\underset{\sim}{g}_R^\alpha(\cdot)$ is either a continuous, uniformly increasing-function on $\mathbb{R}^{n_\alpha}$, or else a C^1-strictly-increasing diffeomorphic state function mapping $\mathbb{R}^{n_\alpha}$ onto $\mathbb{R}^{n_\alpha}$, then $\underset{\sim}{g}_R^\alpha(\cdot)$ is eventually strictly passive, satisfies (59) and, from Theorem 5 (iii) above, $\underset{\sim}{g}_p^\alpha(\cdot)$ is eventually strictly passive. We will use this fact in Theorem 6 below.

<u>Example</u>: The three-port N shown earlier in Fig. 4 contains linear resistors and satisfies the conditions of Theorem 5. Indeed, it follows from Theorem 5 that $\underset{\sim}{g}_p(\cdot)$ below is strictly increasing, strictly passive, and $\lim_{\|\underset{\sim}{x}_p\| \to \infty} \underset{\sim}{x}_p^T \underset{\sim}{g}_p(\underset{\sim}{x}_p) = +\infty$.

$$\underset{\sim}{g}_p(\underset{\sim}{x}_p) = \underset{\sim}{g}_p\begin{pmatrix} v_p^1 \\ v_p^2 \\ v_p^3 \end{pmatrix} = \begin{bmatrix} \frac{1}{R^1} + \frac{1}{R^3+R^4} & \frac{1}{R^3+R^4} & \frac{R^3}{R^3+R^4} \\ \frac{1}{R^3+R^4} & \frac{1}{R^2} + \frac{1}{R^3+R^4} & \frac{R^3}{R^3+R^4} \\ -\frac{R_3}{R^3+R^4} & \frac{-R^3}{R^3+R^4} & \frac{R^3R^4}{R^3+R^4} \end{bmatrix} \begin{pmatrix} v_p^1 \\ v_p^2 \\ v_p^3 \end{pmatrix} \tag{69}$$

The condition that each $\underset{\sim}{g}_R^\alpha(\cdot)$ is a strictly-increasing C^μ-diffeomorphic function mapping $\mathbb{R}^{n_\alpha}$ onto $\mathbb{R}^{n_\alpha}$ is also used in the Theorem B which asserts that $\underset{\sim}{g}_p(\cdot)$ in (7) exists. Thus, we have

Theorem 6: Let N be a resistive n_p-port where each internal resistor function $\underset{\sim}{g}_R^\alpha(\cdot)$ is a C^μ-strictly-increasing diffeomorphic function mapping $\mathbb{R}^{n_\alpha}$ onto $\mathbb{R}^{n_\alpha}$. Assume there are no loops and no cutsets formed exclusively by the ports.

Then $\underset{\sim}{g}_p(\cdot)$ in (7) describing N exists; it is a strictly-increasing C^μ-diffeomorphism mapping $\mathbb{R}^{n_p}$ onto $\mathbb{R}^{n_p}$. Furthermore, if each resistor function is, in addition, either a uniformly increasing function or else a state function, then $\underset{\sim}{g}_p(\cdot)$ is eventually strictly passive and

$$\lim_{\|\underset{\sim}{x}_p\|\to\infty} \underset{\sim}{x}_p^T \underset{\sim}{g}_p(\underset{\sim}{x}_p) = +\infty.$$

Proof: Using Theorem B, we conclude that $\underset{\sim}{g}_p(\cdot)$ exists and is C^μ. It is strictly increasing because of Theorem 5. Now, we reverse the roles of independent and dependent port variables. Let $\underset{\sim}{y}_p$ be the independent port variable. Then Theorem B is again applicable, and $-\underset{\sim}{x}_p$ is a C^μ-function of y_p.[9] Hence, $\underset{\sim}{g}_p(\cdot)$ has a C^μ-inverse. Finally, using Theorem A-4, we conclude each $\underset{\sim}{g}_R^\alpha(\cdot)$ is continuous, eventually strictly passive, and satisfies (59). Hence, from Theorem 5(iii), $\underset{\sim}{g}_p(\cdot)$ is eventually strictly passive and satisfies (66). ∎

We conclude this section by examining resistive n_p-ports with uniformly increasing resistors.

Conjecture 3: If the functions $\underset{\sim}{g}_R^\alpha(\cdot)$ of the internal resistors of N are uniformly increasing, and the ports form no loops and form no cutsets, then $\underset{\sim}{g}_p(\cdot)$ is uniformly increasing.

This conjecture is false; the one-port shown in Fig. 8 is a counterexample. The resistor inside the one-port is a uniformly-increasing

[9] Because of the minus sign in (7), $\underset{\sim}{x}_p = -[-\underset{\sim}{g}_p^{-1}(-\underset{\sim}{y}_p)]$.

voltage-controlled resistor, since $\frac{di_R^1}{dv_R^1} \geq 1$, for all $v_R^1 \in \mathbb{R}^1$. However, if we take the <u>inverse function</u>, $v_p = -g_p(i_p)$, where

$$g_p(i_p) = \begin{cases} i_p & i_p \geq 0 \\ -\ln(1-i_p) & i_p < 0 \end{cases} \tag{70}$$

and consider the one-port as <u>current-driven</u>, then $g_p(\cdot)$ is <u>not</u> uniformly increasing since $\frac{dv_p}{di_p} \to 0$ as $i_p \to -\infty$.

The above example suggests that we have to require both $\underset{\sim}{g}_R^\alpha$ and its inverse $(\underset{\sim}{g}_R^\alpha)^{-1}$ to be uniformly increasing.

<u>Theorem 7</u>: Let N be a resistive n_p-port where each resistor function $\underset{\sim}{g}_R^\alpha$ is a C^μ-uniformly-increasing function, and $(\underset{\sim}{g}_R^\alpha)^{-1}$ is also uniformly increasing. Assume there are no loops and no cutsets formed exclusively by the ports. Then $\underset{\sim}{g}_p$ in (7) describing N exists. Moreover, it is a C^μ-eventually strictly-passive, uniformly-increasing diffeomorphism mapping $\mathbb{R}^{n_p}$ onto $\mathbb{R}^{n_p}$; $\underset{\sim}{g}_p^{-1}$ is also uniformly increasing, and

$$\lim_{\|\underset{\sim}{x}_p\| \to \infty} \frac{1}{\|\underset{\sim}{x}_p\|} \underset{\sim}{x}_p^T \underset{\sim}{g}_p(\underset{\sim}{x}_p) = +\infty \tag{71}$$

<u>Remark</u>: Much of the above theorem has been presented in Theorem A-4, Theorem 5, and Theorem 6. The only part to prove -- that $\underset{\sim}{g}_p$ and $\underset{\sim}{g}_p^{-1}$ are uniformly increasing -- is proved in the same way as in the previous theorems. It need not be repeated here.

IV. <u>Resistive n_p-Ports Containing Independent Sources</u>

We examine the resistive n_p-port N assuming there are independent

voltage and current sources inside N. One way of dealing with the sources is to rearrange them inside N without affecting the port and resistor voltages and currents, and then analyze the modified n_p-port. For example, if two current sources $I_1(t)$ and $I_2(t)$ are in parallel, we can replace them with one current source $I(t) = I_1(t) + I_2(t)$. If current source I(t) is in parallel with voltage source E(t), we can replace the current source with an open circuit. This idea of altering the n_p-port is made explicit in the following:

Let N be an n_p-port (resp., $\mathcal{N}$ be a network). We say that $\tilde{N}$ is an <u>equivalent n_p-port</u> (resp., $\tilde{\mathcal{N}}$ is an equivalent network) if, and only if, $\tilde{N}$ is derived from N (resp., $\tilde{\mathcal{N}}$ is derived from $\mathcal{N}$) by altering a few of the circuit elements so that the remaining element voltages and currents remain the same.

<u>Remark</u>: In this paper, $\tilde{N}$ is derived from N, and $\tilde{\mathcal{N}}$ is derived from $\mathcal{N}$ in specific ways: In this section N contains resistors and sources, and $\tilde{N}$ is formed by altering the sources. In the next section, $\mathcal{N}$ contains capacitors, inductors, resistors and sources; $\tilde{\mathcal{N}}$ is formed by altering the capacitors and inductors. Because of the equivalence between N and $\tilde{N}$ or between $\mathcal{N}$ and $\tilde{\mathcal{N}}$, we can study the properties of $\tilde{\mathcal{N}}$ or $\tilde{N}$ to determine the properties of $\mathcal{N}$ or of N.

Two well-known results concerning equivalent networks are the <u>i-Shift Theorem</u> [3][10] and its dual the <u>v-Shift Theorem</u>. Another

[10] The i-Shift Theorem is essentially the following: Assume in $\mathcal{N}$ (or in N) that current source I(t) is in a loop $\mathcal{L}$ of elements. Then we can form an equivalent $\tilde{\mathcal{N}}$ (or $\tilde{N}$) by replacing I(t) with an open circuit, and place appropriately directed current sources with value I(t) in parallel with the other elements of $\mathcal{L}$.

equivalent network theorem asserts that if N is a resistive n_p-port containing independent voltage and current sources which violate neither KCL nor KVL, then, there is an equivalent n_p-port $\tilde{N}$ formed from N where there is no loop and no cutset formed exclusively by the sources. This result applies also to networks. Its proof is straightforward. Essentially, if there is a loop of voltage sources, then from KVL, the voltages are linearly dependent and we may replace one of them by an open circuit. While, if there is a loop of sources containing a current source, we apply the i-shift theorem to the loop. The dual reasoning applies to cutsets of sources.

<u>Theorem 8</u>: Let N be a resistive n_p-port containing, in addition to resistors, independent voltage and current sources which violate neither KCL nor KVL. Then there is an equivalent n_p-port $\tilde{N}$ formed from N such that each voltage source (resp., current source) is in series (resp., in parallel) with either an external port of N, or a port of an internal resistor of N. In particular, the independent sources are attached to the ports of $\tilde{N}$ as shown in Fig. 9a, to the multiport resistors of N as shown in Fig. 9a, and to the one-port resistors as shown in Fig. 9b, or Fig. 9d. Furthermore, if the ports of N form no loops and form no cutsets, then $\tilde{N}$ can be formed where the sources are attached to the internal resistors only.

<u>Remark</u>: The following proof illustrates the equivalence of N and $\tilde{N}$ in that the resistors are unaffected; the sources are simply rearranged.

<u>Proof</u>: First, we show that the order the sources are attached does not matter. That is, for example, we may attach sources to one-port resistors as in Fig. 9b or Fig. 9d. To show this, to the current

source I in Fig. 9b we place in series a voltage source E as in Fig. 9c. This can be done without affecting the other element voltages and currents. We then apply the v-Shift Theorem to the voltage sources of Fig. 9c to obtain Fig. 9d.

Let us first transform the sources so that there are no loops and no cutsets of sources in the resulting equivalent n_p-port. Then, since each current source I(t) does not form a cutset with the sources, from the Colored Arc Corollary I(t) forms a loop with resistors and ports. We apply the i-Shift Theorem to replace the current source I(t) with an open circuit, and place current sources in parallel with resistors and ports as in Fig. 9 (specifically, Fig. 9b for one-port elements). Similarly, to each voltage source E(t) we apply the v-Shift Theorem to attach the voltage sources to the resistors and ports as in Fig. 9.

Finally, assume that the ports of N form no loops and form no cutsets. This is still true after applying the i-Shift Theorem and v-Shift Theorem as in the previous paragraph. Then, using the Colored Arc Corollary, each port forms a loop and forms a cutset exclusively with the internal "composite resistor-source" elements of Fig. 9d. We apply the i-Shift and v-Shift Theorems once again, and eliminate sources attached to the ports. ∎

The attachment of constant sources to the internal resistors of N as in Fig. 9 changes the constitutive relation from (4) $\left(\underset{\sim}{y}_R^\alpha = \underset{\sim}{g}_R^\alpha(\underset{\sim}{x}_R^\alpha)\right)$ to

$$\underset{\sim}{y}_R^\alpha = \underset{\sim}{g}_R^\alpha(\underset{\sim}{x}_R^\alpha+\underset{\sim}{b}_1^\alpha) + \underset{\sim}{b}_2^\alpha \triangleq \underset{\sim}{\tilde{g}}_R^\alpha(\underset{\sim}{x}_R) \tag{72}$$

where $\underset{\sim}{b}_1, \underset{\sim}{b}_2 \in \mathbb{R}^{n_\alpha}$ (if the sources are time varying, $\underset{\sim}{b}_1^\alpha$ and $\underset{\sim}{b}_2^\alpha$ in (72) become time-varying vector functions). This changing of the resistor characteristics affects the passive nature of the resistors,

but not the increasing nature, since this latter property essentially reflects the "slope" $\partial y_{\underset{\sim}{R}}^{\alpha}/\partial x_{\underset{\sim}{R}}^{\alpha}$ in (4) and in (72). Also, in some circumstances the eventually strictly passive nature of a resistor remains unaffected. For example, if the resistor of Fig. 9d is linear, then for any E, and I, the composite element of Fig. 9d is a uniformly-increasing, eventually strictly-passive resistor.

<u>Theorem 9</u>: Let N be a resistive n_p-port containing, in addition to internal resistors, <u>constant</u> independent voltage and current sources, which violate neither KCL nor KCL. Let the constitutive relation of each resistor be represented by a C^{μ}-function $\underset{\sim}{g}_R^{\alpha}(\cdot)$, where $\mu \geq 0$. We conclude

1. If each $\underset{\sim}{g}_R^{\alpha}(\cdot)$ is increasing, then N is increasing.

2. Assume the ports form no loops and form no cutsets, and N is described by (7). If each $\underset{\sim}{g}_R^{\alpha}(\cdot)$ is strictly increasing, the $\underset{\sim}{g}_p(\cdot)$ is strictly increasing.

3. Assume the ports form no loops and form no cutsets, and each $\underset{\sim}{g}_R^{\alpha}(\cdot)$ is a C^{μ}-strictly-increasing diffeomorphism mapping $\mathbb{R}^{n_\alpha}$ onto $\mathbb{R}^{n_\alpha}$. Then $\underset{\sim}{g}_p(\cdot)$ in (7) describing N exists, and it is a strictly-increasing C^{μ}-diffeomorphism mapping $\mathbb{R}^{n_p}$ onto $\mathbb{R}^{n_p}$.

4. In 3. above, if in addition each $\underset{\sim}{g}_R^{\alpha}(\cdot)$ is a uniformly increasing function or else a state function, then $\underset{\sim}{g}_p(\cdot)$ is eventually strictly passive.

<u>Remark</u>: This theorem is a restatement of Theorems 1, 5 and 6. Essentially, we are saying that these theorems for n_p-ports are not affected by the addition of constant sources.

<u>Proof</u>: It suffices to show 3.; the proofs of 1., 2., and 4. are similar. We apply Theorem 8 to N, and form the equivalent n_p-port $\tilde{N}$ where

constant sources are attached to the resistors as in Fig. 9. The equation describing each composite resistor is (72). Now, if $\underset{\sim}{g}_R^\alpha(\cdot)$ is a strictly-increasing C^μ-diffeomorphism mapping $\mathbb{R}^{n_\alpha}$ onto $\mathbb{R}^{n_\alpha}$, then $\tilde{\underset{\sim}{g}}_R^\alpha(\cdot)$ has this property also (similarly in 4., if $\underset{\sim}{g}_R^\alpha(\cdot)$ is a uniformly increasing function or is a state function, then so is $\tilde{\underset{\sim}{g}}_R^\alpha(\cdot)$). It follows from Theorem 6 that there exists a C^μ-strictly-increasing diffeomorphism $\tilde{\underset{\sim}{g}}_p(\cdot)$ mapping $\mathbb{R}^{n_p}$ onto $\mathbb{R}^{n_p}$ which describes $\tilde{N}$. Finally, since N and $\tilde{N}$ are equivalent, they have the same port voltages and currents, and thus $\tilde{\underset{\sim}{g}}_p(\cdot) = \underset{\sim}{g}_p(\cdot)$ describes N. ∎

We could apply this theorem to n_p-ports containing time-varying resistors. In this case, $\underset{\sim}{b}_1^\alpha(\cdot)$ and $\underset{\sim}{b}_2^\alpha(\cdot)$ in (72) would become functions of time, and N would be described by

$$\underset{\sim}{y}_p = -\underset{\sim}{g}_p(\underset{\sim}{x}_p, t) \tag{73}$$

instead of (7), where $\underset{\sim}{g}_p(\cdot,t)$ would have the properties of Theorem 9 at each time t. However, when we have time-varying sources, it is often more convenient to work with the equation $\underset{\sim}{y}_p = -\underset{\sim}{g}_p(\underset{\sim}{x}_p, \underset{\sim}{u}_S)$ (this is Eq. (6)) where $\underset{\sim}{u}_S(t)$ represents the time-varying sources. To obtain an equation of this sort, we view N as an (n_p+n_S)-port where sources are attached to the extracted n_S ports as shown in Fig. 10. Then N is described by

$$\underset{\sim}{y}_p = -\underset{\sim}{g}_p(\underset{\sim}{x}_p, \underset{\sim}{u}_S) \tag{74a}$$

$$\underset{\sim}{w}_S = -\underset{\sim}{g}_S(\underset{\sim}{x}_p, \underset{\sim}{u}_S) \tag{74b}$$

where $\underset{\sim}{w}_S$ in the second equation denotes the currents of time-varying voltage sources, and the voltages of time-varying current sources. In

this paper, we are interested in (74a), which is (6). We shall not discuss (74b).[11]

The following theorem is similar to the previous theorem; it summarizes the extension of our n_p-port results to the case where N has time-varying sources.

<u>Theorem 10</u>: Let N be a resistive n_p-port containing, in addition to resistors, constant and time-varying[12] independent sources. Assume there is no loop formed exclusively by time-varying voltage sources and ports, and that there is no cutset formed exclusively by time-varying current sources and ports. Let the constitutive relation of each resistor be represented by the C^{μ}-function $\underset{\sim}{g}_R^{\alpha}(\cdot)$, where $\mu \geq 0$. We have

1. If N is described by (6) (or (72)) and each $\underset{\sim}{g}_R^{\alpha}(\cdot)$ is increasing, then $\underset{\sim}{g}_p(\cdot,\underset{\sim}{u}_S)$ is increasing for all $\underset{\sim}{u}_S \in \mathbb{R}^{n_S}$.

2. Assume there is no loop and no cutset formed exclusively by the ports. If N is described by (6) and each $\underset{\sim}{g}_R^{\alpha}(\cdot)$ is strictly increasing,

---

[11] In other contexts, (74b) is important. For example, assume that the capacitors and inductors are attached to the n_p-ports of N. They are described by $\underset{\sim}{x}_p = \underset{\sim}{f}_p^{-1}(\underset{\sim}{z}_p)$ -- see Eqs. (1) and (3) -- and we have formed a dynamic, nonlinear, electrical input-output system where $\underset{\sim}{u}_S(t)$ is the input, and $\underset{\sim}{w}_S(t)$ is the output. The Dynamical System Representation [22] is

$$\dot{\underset{\sim}{z}} = -\underset{\sim}{g}_p(\underset{\sim}{f}_p^{-1}(\underset{\sim}{z}_p),\underset{\sim}{u}_S)$$

$$\underset{\sim}{w}_S = -\underset{\sim}{g}_S(\underset{\sim}{f}_p^{-1}(\underset{\sim}{z}_p),\underset{\sim}{u}_S)$$

In the two papers [12] and [13], we place conditions upon the capacitors, inductors, resistors and sources so that, for example, for every input $\underset{\sim}{u}_S(t)$ there is, in the steady-state, a unique output $\underset{\sim}{w}_S(t)$.

[12] Here, a source is time-varying if it indeed varies with time, or if it is a constant source which we want to be represented by a component of the source vector $\underset{\sim}{u}_S(t)$, and we do not want it "absorbed" into the resistors as in Fig. 9.

then $\underset{\sim}{g}_p(\cdot,\underset{\sim}{u}_S)$ is strictly increasing for all $\underset{\sim}{u}_S \in \mathbb{R}^{n_S}$.

3. Assume there is no loop and no cutset formed exclusively by the ports. If each $\underset{\sim}{g}_R^{\alpha}(\cdot)$ is a C^{μ}-strictly-increasing diffeomorphism mapping $\mathbb{R}^{n_\alpha}$ onto $\mathbb{R}^{n_\alpha}$, then $\underset{\sim}{g}_p(\cdot,\cdot)$ in (6) exists, it is C^{μ}, and $\underset{\sim}{g}_p(\cdot,\underset{\sim}{u}_S)$ is a C^{μ}-strictly-increasing diffeomorphism mapping $\mathbb{R}^n$ onto $\mathbb{R}^n$ for all $\underset{\sim}{u}_S \in \mathbb{R}^{n_S}$.

4. In 3. above, if in addition each $\underset{\sim}{g}_R^{\alpha}(\cdot)$ is a uniformly-increasing function or else a state function, then $\underset{\sim}{g}_p(\cdot,\underset{\sim}{u}_S)$ is eventually strictly passive for all $\underset{\sim}{u}_S \in \mathbb{R}^{n_S}$.

Remark: This theorem is proved in the same way as Theorem 9; the proof need not be repeated here, but it is instructive to see how Tellegen's Theorem is applied to the (n_p+n_S)-port of Fig. 10. As in Eq. (23),

$$[\underset{\sim}{v}_p' - \underset{\sim}{v}_p'']^T[\underset{\sim}{i}_p' - \underset{\sim}{i}_p''] + [\underset{\sim}{v}_S' - \underset{\sim}{v}_S'']^T[\underset{\sim}{i}_S' - \underset{\sim}{i}_S''] + [\underset{\sim}{v}_R' - \underset{\sim}{v}_R'']^T[\underset{\sim}{i}_R' - \underset{\sim}{i}_R''] = 0 \tag{75}$$

where $\begin{pmatrix}\underset{\sim}{v}_S\\ \underset{\sim}{i}_S\end{pmatrix} \in \mathbb{R}^{2n_S}$ denote the voltages and currents of the time-varying sources. Now, either $i_S' = i_S''$ for current sources, or $v_S' = v_S''$ for voltage sources. Thus, (75) reduces to (23), and the increasing nature of N remains unaffected if sources are attached.

As a final remark, it is assumed without loss of generality in this Theorem that there is no loop and no cutsets of independent sources in N.

V. Forming Network $\mathcal{N}$ by Attaching Capacitors and Inductors to n_p-Port N

To the resistive n_p-port N containing constant and time-varying

independent sources, we attach capacitors and inductors as in Fig. 1 to form network $\mathcal{N}$ described by (8). In [12], and [13], we combine mathematical methods with the results of this paper to predict the behavior of the solutions of (8). In this section, we give an extension of Theorem 2, and, in the following theorem, show how networks with loops of capacitors and cutsets of inductors are equivalent to networks without such loops and cutsets.

In analyzing dynamic, nonlinear networks, researchers have either not allowed loops of capacitors and cutsets of inductors [4], or else have been forced to treat these cases separately [5]. This is because, for example, if there is a cutset formed by inductors, the inductor currents are linearly dependent because of KCL, and there is no equation of the form (8). There have been attempts previously to alter networks so as to delete these loops and cutsets. For example, let $\mathcal{N}$ be a network where three linear, uncoupled inductors are attached at node $\eta_{⓪}$ -- see Fig. 11a. It has been shown [23] (this is also an illustration of Theorem 12b below) that an equivalent network $\tilde{\mathcal{N}}$ may be formed which does not contain this cutset of inductors by replacing inductor L_3 with a short circuit, and changing the other two inductors as shown in Fig. 11b.

By changing $\mathcal{N}$ to $\tilde{\mathcal{N}}$, we have removed the inductor cutset. Let us examine the way $\mathcal{N}$ and $\tilde{\mathcal{N}}$ are equivalent. It is easy to argue that the network currents remain unaffected by the change; i.e., we can show $\begin{pmatrix} i_L^1(t) \\ i_L^2(t) \\ i_L^3(t) \end{pmatrix}$ are admissible currents at node $\eta_{⓪}$ for network $\mathcal{N}$ and network $\tilde{\mathcal{N}}$. However, the voltages have changed: In Fig. 11a the voltage across nodes $\eta_{③}$ and $\eta_{⓪}$ is $L_3 \frac{di_L^3(t)}{dt}$, while the voltage across nodes

$\eta_{③}$ and $\eta_{⓪}$ in Fig. 11b is 0. This does not violate our definition of equivalence because the voltages of all elements <u>other than</u> L_1, L_2 and L_3 are the same in $\mathcal{N}$ and $\tilde{\mathcal{N}}$. This is because the voltage between nodes $\eta_{①}$ and $\eta_{③}$, and between nodes $\eta_{②}$ and $\eta_{③}$ are the same for $\mathcal{N}$ and $\tilde{\mathcal{N}}$. In applying KVL, any loop involving node $\eta_{⓪}$ also involves nodes $\eta_{①}$ and $\eta_{③}$, or nodes $\eta_{②}$ and $\eta_{③}$, so the resulting loop equations remain the same.

<u>Theorem 11a</u>: Let $\mathcal{N}$ be a network containing capacitors, inductors, resistors, constant independent sources, and time-varying independent sources. Assume without loss of generality that there is no loop of voltage sources. All element voltages and currents of $\mathcal{N}$ are continuous functions of time. Let n_C denote the number of capacitors of $\mathcal{N}$; they are described by the C^{μ}-function $\underset{\sim}{f}_C$: $\mathbb{R}^{n_C} \to \mathbb{R}^{n_C}$, $\underset{\sim}{q}_C = \underset{\sim}{f}_C(\underset{\sim}{v}_C)$ (this is (1)). Let $\underset{\sim}{E}_{n_E} \in \mathbb{R}^{n_E}$ represent the n_E constant voltage sources. Assume there are $m_C < n_C$ linearly independent loops of capacitors and constant voltage sources. Possibly after reordering the capacitors, these loops are represented by the rows of the matrix[13]

$$\left[-\underset{\sim}{B}_{n_E} \;\middle|\; -\underset{\sim}{B}_{n_C-m_C} \;\middle|\; \underset{\sim}{1}_{m_C} \right] \tag{76}$$

where all elements are 0, +1, or -1, $\underset{\sim}{B}_{n_E} \in \mathbb{R}^{m_C \times n_E}$ has columns corresponding to constant voltage sources, $\underset{\sim}{B}_{n_C-m_C} \in \mathbb{R}^{m_C \times (n_C-m_C)}$ has columns corresponding to the capacitors, as does the $m_C \times m_C$ identity matrix $\underset{\sim}{1}_{m_C}$.

An equivalent network $\tilde{\mathcal{N}}$ can be formed from $\mathcal{N}$ which has no loops formed by capacitors and constant voltage sources. $\tilde{\mathcal{N}}$ is formed by replacing the capacitors corresponding to the columns of $\underset{\sim}{1}_{m_C}$ with open

[13] The minus signs in (76) are introduced solely for convenience.

circuits, and replacing the capacitors corresponding to the columns of $-\underset{\sim}{B}_{n_C-m_C}$ by those described by the following C^μ-function $\tilde{\underset{\sim}{f}}_C$: $\mathbb{R}^{n_C-m_C} \to \mathbb{R}^{n_C-m_C}$:

$$\tilde{\underset{\sim}{q}}_C = \tilde{\underset{\sim}{f}}_C(\tilde{\underset{\sim}{v}}_C) \triangleq \left[\underset{\sim}{1}_{n_C-m_C} \;\vdots\; \underset{\sim}{B}^T_{n_C-m_C}\right] \underset{\sim}{f}_C\left(\begin{array}{c}\tilde{\underset{\sim}{v}}_C \\ \hline \underset{\sim}{B}_{n_C-m_C}\tilde{\underset{\sim}{v}}_C + \underset{\sim}{B}_{n_E}\underset{\sim}{E}_{n_E}\end{array}\right) \tag{77}$$

Furthermore, if the original C^μ-function $\underset{\sim}{f}_C$: $\mathbb{R}^{n_C} \to \mathbb{R}^{n_C}$ is

(i) a state function

(ii) an increasing function

(iii) a strictly-increasing function

(iv) a uniformly-increasing function

(v) a C^μ-strictly-increasing diffeomorphic-state function mapping $\mathbb{R}^{n_C}$ onto $\mathbb{R}^{n_C}$ (for $\mu \geq 1$)

Then the C^μ-function $\tilde{f}_C$: $\mathbb{R}^{n_C-m_C} \to \mathbb{R}^{n_C-m_C}$ also has the same property.[14]

<u>Remarks</u>: 1. If we included time-varying sources as well as constant sources in the theorem $\tilde{\underset{\sim}{f}}_C$ in (77) would be time-varying, and the remaining conclusions of the theorem still hold.

2. The function $\tilde{\underset{\sim}{f}}_C$ is unique up to a constant. Indeed, any capacitor and inductor function is unique up to a constant in the sense that a capacitor function $\underset{\sim}{f}_C(\cdot) + \underset{\sim}{q}_0$, is equivalent to $\underset{\sim}{f}_C(\cdot)$ for all $\underset{\sim}{q}_0 \in \mathbb{R}^{n_C}$. For example, a linear one-port capacitor described by $q_C = Cv_C$ has the identical voltage and current $\begin{pmatrix} i_C(t) \\ v_C(t) \end{pmatrix} = \begin{pmatrix} C\frac{dv_C(t)}{dt} \\ v_C(t) \end{pmatrix}$ as the capacitor described by $q_C = Cv_C + q_0$.

3. If all capacitors are linear so that (1) is $\underset{\sim}{q}_C = \underset{\sim}{C}\underset{\sim}{v}_C$, and no

[14] Where in (v), of course, $\tilde{\underset{\sim}{f}}_C$ is a C^μ-diffeomorphism mapping $\mathbb{R}^{n_C-m_C}$ onto $\mathbb{R}^{n_C-n_C}$.

constant voltage sources are involved in the m_C loops, then (77) reduces to

$$\tilde{q}_C = \tilde{C}\tilde{v}_C = \left[\underset{\sim}{1}_{n_C-m_C} \;\vdots\; \underset{\sim}{B}^T_{n_C-m_C}\right] \underset{\sim}{C} \begin{bmatrix} \underset{\sim}{1}_{n_C-m_C} \\ \hline \underset{\sim}{B}_{n_C-m_C} \end{bmatrix} \tilde{v}_C \tag{78}$$

4. If there is only one loop (m_C=1) then the submatrices in (76) become row vectors $-\underset{\sim}{b}_{n_E}$, $-\underset{\sim}{b}_{n_C-1}$, and (77) reduces to

$$\tilde{q}_C = \tilde{f}_C(\tilde{v}_C) = \left[\underset{\sim}{1}_{n_C-1} \;\vdots\; \underset{\sim}{b}^T_{n_C-1}\right] \underset{\sim}{f}_C\left(\begin{matrix} \tilde{v}_C \\ \hline \underset{\sim}{b}_{n_C-1}\tilde{v}_C + \underset{\sim}{b}_{n_E}\underset{\sim}{E}_{n_E} \end{matrix}\right) \tag{79}$$

The following is the dual theorem for cutsets of inductors and constant current sources.

<u>Theorem 11b</u>: Let $\mathcal{N}$ be a network containing capacitors, inductors, resistors, constant independent sources, and time-varying independent sources. Assume without loss of generality that there is no cutset of current sources. All element voltages and currents of $\mathcal{N}$ are continuous in time. Let n_L denote the number of inductors of $\mathcal{N}$; they are described by the C^μ-function $\underset{\sim}{f}_L$: $\mathbb{R}^{n_L} \to \mathbb{R}^{n_L}$, $\phi_L = \underset{\sim}{f}_L(\underset{\sim}{i}_L)$ (this is (1)). Let $\underset{\sim}{I}_{n_I} \in \mathbb{R}^{n_I}$ denote the n_I constant current sources. Assume there are $m_L < n_L$ linearly independent cutsets of inductors and constant current sources. Possibly after reordering the inductors, these cutsets are represented by the rows of the matrix

$$\left[-\underset{\sim}{B}_{n_I} \;\vdots\; -\underset{\sim}{B}_{n_L-m_L} \;\vdots\; \underset{\sim}{1}_{m_L}\right] \tag{80}$$

where all elements are 0, +1, or -1, $\underset{\sim}{B}_{n_I} \in \mathbb{R}^{m_L \times n_I}$ has columns corresponding to constant current sources, $\underset{\sim}{B}_{n_L-m_L} \in \mathbb{R}^{m_L \times (n_L-m_L)}$ has columns corresponding to the inductors, as does the $m_L \times m_L$ identity

matrix $\underset{\sim}{1}_{m_L}$.

An equivalent network $\tilde{\mathcal{N}}$ can be formed from $\mathcal{N}$ which has no cut-sets formed by inductors and constant current sources. $\tilde{\mathcal{N}}$ is formed by replacing inductors corresponding to the columns of $\underset{\sim}{1}_{m_L}$ with short circuits, and replacing the inductors corresponding to the columns of $-\underset{\sim}{B}_{n_L-m_L}$ by those described by the following C^{μ}-function $\underset{\sim}{\tilde{f}}_L$: $\mathbb{R}^{n_L-m_L} \to \mathbb{R}^{n_L-m_L}$;

$$\underset{\sim}{\tilde{\phi}}_L = \underset{\sim}{\tilde{f}}_L(\underset{\sim}{\tilde{i}}_L) = \left[\underset{\sim}{1}_{n_L-m_L} \;\vdots\; \underset{\sim}{B}^T_{n_L-m_L}\right] \underset{\sim}{f}_L\left(\begin{array}{c} \underset{\sim}{\tilde{i}}_L \\ \hline \underset{\sim}{B}_{n_L-m_L}\underset{\sim}{\tilde{i}}_L + \underset{\sim}{B}_{n_I}\underset{\sim}{I}_{n_I} \end{array}\right) \tag{81}$$

Furthermore, if the original C^{μ}-function $\underset{\sim}{f}_L$: $\mathbb{R}^{n_L} \to \mathbb{R}^{n_L}$ has any of the properties (i)-(v) of Theorem 11a, then the C^{μ}-function $\underset{\sim}{\tilde{f}}_L$: $\mathbb{R}^{n_L-m_L} \to \mathbb{R}^{n_L-m_L}$ also has the same property.

<u>Proof of Theorem 11</u>: We only have to prove Theorem 11a since the dual proof applies to Theorem 11b. First, observe that since the matrix (76) describes the linearly independent loops, it follows from KVL that

$$\underset{\sim}{B}_{n_E}\underset{\sim}{E}_{n_E} = \left[-\underset{\sim}{B}_{n_C-m_C} \;\vdots\; \underset{\sim}{1}_{m_C}\right]\underset{\sim}{v}_C \tag{82}$$

where $\underset{\sim}{v}_C \in \mathbb{R}^{n_C}$ denotes, of course, the voltages of the original n_C capacitors. We proceed now in <u>three steps</u>: (1) For $m_C = 1$, we show that (79) describes $\tilde{\mathcal{N}}$ after a capacitor has been replaced by an open circuit. (2) Using induction, assuming (77) describes $\tilde{\mathcal{N}}$ for $m_C = k$, we show that if there are $k + 1$ loops, (77) is also true. (3) We show $\underset{\sim}{\tilde{f}}_C$ in (77) has the appropriate properties (i)-(v).

<u>Step 1</u>: When $m_C = 1$, (76) is a row vector

$$\left[-\underset{\sim}{b}_{n_E} \;\vdots\; -\underset{\sim}{b}_{n_C-1} \;\vdots\; 1_1 \right] \tag{83}$$

We will show that capacitor n_C (which corresponds to the last column of (83)) may be replaced by an open circuit, and the remaining n_C-1 capacitors are replaced by those described by $\underset{\sim}{\tilde{f}}_C$ in (79). See Fig. 12 for illustrations, where the loop described by (83) involves three capacitors and one constant voltage source. Equation (83) yields the KVL equation around the loop

$$v_C^{n_C} = \underset{\sim}{b}_{n_C-1}\underset{\sim}{\tilde{v}}_C + \underset{\sim}{b}_{n_E}\underset{\sim}{E}_{n_E} \tag{84}$$

where $v_C^{n_C}$ denotes the voltage of capacitor n_C, and $\underset{\sim}{\tilde{v}}_C = (v_C^1,\ldots,v_C^{n_C-1})^T \in \mathbb{R}^{n_C-1}$ denotes the voltages of the remaining capacitors.

Now, network $\tilde{\mathcal{N}}_0$ equivalent to $\mathcal{N}$ is formed by replacing capacitor n_C with a current source $I(t) = \frac{d}{dt}q_C^{n_C}(t)$; see Fig. 12b. Network $\tilde{\mathcal{N}}_0$ is equivalent to $\mathcal{N}$ because $v_C^{n_C}$ satisfies (84), and by assumption, the continuous capacitor current is the same as the current-source current.

Next, we apply the i-Shift Theorem to the current source; it is replaced by an open circuit and other current sources with value $I(t)$ are placed in parallel with the other elements of the loop; see Fig. 12c. Any current source in parallel with a voltage source may be deleted (replaced by an open circuit) without affecting any other element voltages and currents. Current source $I(t) = \frac{d}{dt}\, q_C^{n_C}(t)$ in parallel with the jth capacitor of the loop whose voltage and charge are v_C^j and q_C^j, respectively (Fig. 12d) is replaced by a capacitor whose voltage is v_C^j and charge is $q_C^{n_C}$. This is the reversal of the process that originally changed capacitor n_C to a current source. Finally, as

in Fig. 12d, the two parallel capacitors are equivalently replaced by one capacitor whose voltage is v_C^j and whose charge is $q_C^j \pm q_C^{n_C}$, where the sign is minus if, and only if, the two capacitors were similarly directed in the original loop of (83).

We have formed a network $\tilde{\mathcal{N}}$ equivalent to $\mathcal{N}$ by replacing capacitor n_C with an open circuit, and the remaining capacitors of $\tilde{\mathcal{N}}$ are described by (see Fig. 12e)

$$\tilde{q}_C = \begin{bmatrix} q_C^1 \\ \vdots \\ q_C^{n_C-1} \end{bmatrix} + \underset{\sim}{b}_{n_C-1}^T \cdot q_C^{n_C}$$

$$= \begin{bmatrix} f_C^1(\underset{\sim}{\tilde{v}}_C, v_C^{n_C}) \\ \vdots \\ f_C^{n_C-1}(\underset{\sim}{\tilde{v}}_C, v_C^{n_C}) \end{bmatrix} + \underset{\sim}{b}_{n_C-1}^T f_C^{n_C}(\underset{\sim}{\tilde{v}}_C, v_C^{n_C}) \tag{85}$$

where f_C^j is the jth component of the original capacitor function $\underset{\sim}{f}_C$. Then, combining (84) and (85) gives (79).

<u>Step 2</u>: Assume that if $m_C = k \geq 1$ (i.e., there are k loops in (76)), then there is an equivalent $\tilde{\mathcal{N}}$ with $n_C - k$ capacitors, where the capacitors are described by (77). We will show using the induction process that this is also true if $m_C = k + 1$.

Assume $m_C = k + 1$, then (76) is

$$\left[-\underset{\sim}{B}_{n_E} \;\vdots\; -\underset{\sim}{B}_{n_C-(k+1)} \;\vdots\; \underset{\sim}{1}_{k+1} \right] \tag{86}$$

Now, by assumption, the theorem may be applied to the k loops denoted by all but the first row of (86). Hence, we partition the submatrices in (86) in the following way

$$
\begin{aligned}
\underset{\sim}{B}_{n_E} &= \begin{bmatrix} \tilde{\underset{\sim}{b}}_{n_E} \\ \hline \tilde{\underset{\sim}{B}}_{n_E} \end{bmatrix} \\
\underset{\sim}{B}_{n_C-(k+1)} &= \begin{bmatrix} \tilde{\underset{\sim}{b}}_{n_C-(k+1)} \\ \hline \tilde{\underset{\sim}{B}}_{n_C-(k+1)} \end{bmatrix}
\end{aligned}
\tag{87}
$$

where $\tilde{\underset{\sim}{b}}_{n_E}$ and $\tilde{\underset{\sim}{b}}_{n_C-(k+1)}$ are row vectors. Now for the k loops associated with the rows of (86), excluding the first row, (76) is

$$
\left[-\tilde{\underset{\sim}{B}}_{n_E} \;\middle|\; -\tilde{\underset{\sim}{B}}_{n_C-(k+1)} \;\middle|\; \begin{matrix} 0 \\ \vdots \\ 0 \end{matrix} \;\middle|\; \underset{\sim}{1}_k \right] \tag{88}
$$

Applying the theorem, the k capacitors corresponding to the final k columns of (88) may be replaced by open circuits, and the remaining n_C-k capacitors are now described by (77); namely,

$$
\begin{aligned}
\hat{\underset{\sim}{q}}_C &= \hat{\underset{\sim}{f}}_C(\hat{\underset{\sim}{v}}_C) \\
&= \left[\underset{\sim}{1}_{n_C-k} \;\middle|\; \begin{matrix} \tilde{\underset{\sim}{B}}^T_{n_C-(k+1)} \\ \hline 000\cdots0 \end{matrix} \right] \underset{\sim}{f}_C\left(\begin{matrix} \hat{\underset{\sim}{v}}_C \\ \hline \left[\tilde{\underset{\sim}{B}}_{n_C-(k+1)} \;\middle|\; \begin{matrix} 0 \\ \vdots \\ 0 \end{matrix} \right] \hat{\underset{\sim}{v}}_C + \tilde{\underset{\sim}{B}}_{n_E} \underset{\sim}{E}_{n_E} \end{matrix} \right)
\end{aligned}
\tag{89}
$$

where $\hat{\underset{\sim}{f}}_C$: $\mathbb{R}^{n_C-k} \to \mathbb{R}^{n_C-k}$. There is still another loop to be dealt with; this is the loop corresponding to the first row of (86) which is (compare with (83))

$$
\left[-\tilde{\underset{\sim}{b}}_{n_E} \;\middle|\; -\tilde{\underset{\sim}{b}}_{n_C-(k+1)} \;\middle|\; 1_1 \right] \tag{90}
$$

We apply the result of Step 1; to the network $\tilde{\mathcal{N}}_0$ described by $\hat{\underset{\sim}{f}}(\cdot)$ in (89), we delete the capacitor corresponding to the final column of (90), and replace the remaining $n_C-(k+1)$ capacitor with an equation of the

form of (79);

$$\tilde{\underset{\sim}{q}}_C = \tilde{\underset{\sim}{f}}_C(\tilde{\underset{\sim}{v}}_C)$$

$$= \left[\underset{\sim}{1}_{n_C-(k+1)} \;\middle|\; \tilde{\underset{\sim}{b}}^T_{n_C-(k+1)} \right] \hat{\underset{\sim}{f}}_C \left(\frac{\tilde{\underset{\sim}{v}}_C}{\tilde{\underset{\sim}{b}}_{n_C-(k+1)}\tilde{\underset{\sim}{v}}_C + \tilde{\underset{\sim}{b}}_{n_E}\underset{\sim}{E}_{n_E}} \right)$$

$$= \left[\underset{\sim}{1}_{n_C-(k+1)} \;\middle|\; \tilde{\underset{\sim}{b}}^T_{n_C-(k+1)} \right] \left[\begin{array}{c|c} & \tilde{\underset{\sim}{B}}^T_{n_C-(k+1)} \\ \underset{\sim}{1}_{n_C-k} & \hline 0 \;\cdots\cdots\; 0 \end{array} \right] \cdot$$

$$\cdot\; \underset{\sim}{f}_C \left(\frac{\tilde{\underset{\sim}{v}}_C}{\tilde{\underset{\sim}{b}}_{n_C-(k+1)}\tilde{\underset{\sim}{v}}_C + \tilde{\underset{\sim}{b}}_{n_E}\cdot\underset{\sim}{E}_{n_E}} \Bigg/ \left[\tilde{\underset{\sim}{B}}_{n_C-(k+1)} \;\middle|\; \begin{matrix} 0 \\ 0 \\ \vdots \\ 0 \end{matrix} \right] \left[\frac{\tilde{\underset{\sim}{v}}_C}{\tilde{\underset{\sim}{b}}_{n_C-(k+1)}\tilde{\underset{\sim}{v}}_C + \tilde{\underset{\sim}{b}}_{n}\cdot\underset{\sim}{E}_{n_E}} \right] + \tilde{\underset{\sim}{B}}_{n_E}\underset{\sim}{E}_{n_E} \right)$$

$$= \left[\underset{\sim}{1}_{n_C-(k+1)} \;\middle|\; \tilde{\underset{\sim}{b}}^T_{n_C-(k+1)} \;\middle|\; \tilde{\underset{\sim}{B}}^T_{n_C-(k+1)} \right] \cdot$$

$$\cdot\; \underset{\sim}{f}_C \left(\frac{\tilde{\underset{\sim}{v}}_C}{\tilde{\underset{\sim}{b}}_{n_C-(k+1)}\tilde{\underset{\sim}{v}}_C + \tilde{\underset{\sim}{b}}_{n_E}\cdot\underset{\sim}{E}_{n_E}} \Bigg/ \tilde{\underset{\sim}{B}}_{n_C-(k+1)}\tilde{\underset{\sim}{v}}_C + \tilde{\underset{\sim}{B}}_{n_E}\underset{\sim}{E}_{n_E} \right)$$

$$= \left[\underset{\sim}{1}_{n_C-(k+1)} \;\middle|\; \underset{\sim}{B}^T_{n_C-(k+1)} \right] \underset{\sim}{f}_C \left(\frac{\tilde{\underset{\sim}{v}}_C}{\underset{\sim}{B}_{n_C-(k+1)}\tilde{\underset{\sim}{v}}_C + \underset{\sim}{B}_{n_E}\cdot\underset{\sim}{E}_{n_E}} \right) \tag{91}$$

which is (77) when $m_C = k + 1$

<u>Step 3</u>: When $\underset{\sim}{f}_C$ is C^μ, then $\tilde{\underset{\sim}{f}}_C$ in (77) is also C^μ. Define

$$\underset{\sim}{J}_C(\underset{\sim}{v}_C) \triangleq \frac{\partial \underset{\sim}{f}_C(\underset{\sim}{v}_C)}{\partial \underset{\sim}{v}_C} \tag{92}$$

$$\tilde{\underset{\sim}{J}}_C(\tilde{\underset{\sim}{v}}_C) \triangleq \frac{\partial \tilde{\underset{\sim}{f}}_C(\tilde{\underset{\sim}{v}}_C)}{\partial \tilde{\underset{\sim}{v}}_C} \tag{93}$$

$\tilde{J}_C$ exists whenever J_C exists, and

$$\tilde{J}_C(\tilde{v}_C) = \begin{bmatrix} 1_{n_C-m_C} \\ \hline B_{n_C-m_C} \end{bmatrix}^T J_C \left(\begin{matrix} \tilde{v}_C \\ \hline B_{n_C-m_C}\tilde{v}_C + B_{n_E}E_{n_E} \end{matrix} \right) \begin{bmatrix} 1_{n_C-m_C} \\ \hline B_{n_C-m_C} \end{bmatrix} \tag{94}$$

Thus, $\tilde{J}_C(\cdot)$ is symmetric and $\tilde{f}_C(\cdot)$ is a state function whenever $\tilde{f}_C(\cdot)$ is a state function.

We will not show that $\tilde{f}_C(\cdot)$ has property (ii) or (iii) whenever $\tilde{f}_C(\cdot)$ has either of these properties. It is enough to show (this is (iv)) that $\tilde{f}_C(\cdot)$ is uniformly increasing if $f_C(\cdot)$ is uniformly increasing.

Using <u>Theorem A-1</u>, (iii), there exists $\lambda_C > 0$ so that for all $v_C \in \mathbb{R}^{n_C}$, for all $x \in \mathbb{R}^{n_C}$, $x \neq 0$

$$x^T J_C(v_C)x - \lambda_C x^T x > 0 \tag{95}$$

Then, let $\tilde{x} \in \mathbb{R}^{n_C-m_C}$, $\tilde{x} \neq 0$, and using (94),

$$\begin{aligned} \tilde{x}^T \tilde{J}_C \tilde{x} &= \tilde{x}^T \left[1_{n_C-m_C} \;\vdots\; B^T_{n_C-m_C} \right] J_C \begin{bmatrix} 1_{n_C-m_C} \\ \hline B_{n_C-m_C} \end{bmatrix} \tilde{x} \\ &> \tilde{x}^T \left[1_{n_C-m_C} \;\vdots\; B^T_{n_C-m_C} \right] \lambda_C \begin{bmatrix} 1_{n_C-m_C} \\ \hline B_{n_C-m_C} \end{bmatrix} \tilde{x} \\ &= \tilde{x}^T \lambda_C \tilde{x} + [B_{n_C-m_C}\tilde{x}]^T [B_{n_C-m_C}\tilde{x}]\lambda_C \\ &\geq \tilde{x}^T \lambda_C \tilde{x} \end{aligned} \tag{96}$$

which means that for all $\tilde{v}_C \in \mathbb{R}^{n_C-m_C}$, for all $\tilde{x} \in \mathbb{R}^{n_C-m_C}$, $\tilde{x} \neq 0$

$$\tilde{x}^T \tilde{J}_C(\tilde{v}_C)\tilde{x} - \lambda_C \tilde{x}^T \tilde{x} > 0 \tag{97}$$

and $\tilde{f}_C$ is uniformly increasing.

Finally assume as in (v) that for $\mu \geq 1$, f_C is a C^μ-strictly-increasing

diffeomorphic state function mapping $\mathbb{R}^{n_C}$ onto $\mathbb{R}^{n_C}$. We know that $\tilde{\underset{\sim}{f}}_C$ is a C^μ-strictly-increasing state function. It is a homeomorphism on $\mathbb{R}^{n_C-m_C}$ because of <u>Theorem A-3</u>. (ii), and it is a C^μ-diffeomorphism for $\mu \geq 1$ because $\tilde{\underset{\sim}{J}}_C(\tilde{\underset{\sim}{v}}_C)$ is nonsingular. Thus, invoking <u>Theorem A-2</u>, we have only to show $\lim_{\|\tilde{\underset{\sim}{v}}_C\| \to \infty} \|\tilde{\underset{\sim}{f}}_C(\tilde{\underset{\sim}{v}}_C)\| = +\infty$. As in the above equations, let $\underset{\sim}{v}_C \in \mathbb{R}^{n_C}$, $\tilde{\underset{\sim}{v}}_C \in \mathbb{R}^{n_C-m_C}$, where in this case

$$\underset{\sim}{v}_C = \begin{bmatrix} \underset{\sim}{1}_{n_C-m_C} \\ \hline \underset{\sim}{B}_{n_C-m_C} \end{bmatrix} \tilde{\underset{\sim}{v}}_C \tag{98}$$

Now, first we conclude that $\|\underset{\sim}{v}_C\| \geq \|\tilde{\underset{\sim}{v}}_C\|$. This is because

$$\begin{aligned} \|\underset{\sim}{v}_C\|^2 &= \underset{\sim}{v}_C^T \underset{\sim}{v}_C = \tilde{\underset{\sim}{v}}_C^T \left[\underset{\sim}{1}_{n_C-m_C} \;\vdots\; \underset{\sim}{B}^T_{n_C-m_C} \right] \begin{bmatrix} \underset{\sim}{1}_{n_C-m_C} \\ \hline \underset{\sim}{B}_{n_C-m_C} \end{bmatrix} \tilde{\underset{\sim}{v}}_C \\ &= \tilde{\underset{\sim}{v}}_C^T \tilde{\underset{\sim}{v}}_C + [\underset{\sim}{B}_{n_C-m_C} \tilde{\underset{\sim}{v}}_C]^T [\underset{\sim}{B}_{n_C-m_C} \tilde{\underset{\sim}{v}}_C] \geq \tilde{\underset{\sim}{v}}_C^T \tilde{\underset{\sim}{v}}_C = \|\tilde{\underset{\sim}{v}}_C\|^2 \end{aligned} \tag{99}$$

Then for any $\tilde{\underset{\sim}{v}}_C \neq \underset{\sim}{0}$

$$\begin{aligned} \|\tilde{\underset{\sim}{f}}_C(\tilde{\underset{\sim}{v}}_C)\| &= \frac{1}{\|\tilde{\underset{\sim}{v}}_C\|} \|\tilde{\underset{\sim}{v}}_C\| \cdot \|\tilde{\underset{\sim}{f}}_C(\tilde{\underset{\sim}{v}}_C)\| \geq \frac{1}{\|\tilde{\underset{\sim}{v}}_C\|} \tilde{\underset{\sim}{v}}_C^T \tilde{\underset{\sim}{f}}_C(\tilde{\underset{\sim}{v}}_C) \\ &= \frac{1}{\|\tilde{\underset{\sim}{v}}_C\|} \tilde{\underset{\sim}{v}}_C^T \left[\underset{\sim}{1}_{n_C-m_C} \;\vdots\; \underset{\sim}{B}^T_{n_C-m_C} \right] \underset{\sim}{f}_C\left(\begin{bmatrix} \underset{\sim}{1}_{n_C-m_C} \\ \hline \underset{\sim}{B}_{n_C-m_C} \end{bmatrix} \tilde{\underset{\sim}{v}}_C + \begin{bmatrix} \underset{\sim}{0} \\ \hline \underset{\sim}{B}_{n_E} \underset{\sim}{E}_{n_E} \end{bmatrix} \right) \\ &= \frac{1}{\|\tilde{\underset{\sim}{v}}_C\|} \underset{\sim}{v}_C^T \underset{\sim}{f}_C\left(\underset{\sim}{v}_C + \begin{bmatrix} \underset{\sim}{0} \\ \hline \underset{\sim}{B}_{n_E} \underset{\sim}{E}_{n_E} \end{bmatrix} \right) \geq \frac{1}{\|\underset{\sim}{v}_C\|} \underset{\sim}{v}_C^T \underset{\sim}{f}_C\left(\underset{\sim}{v}_C + \begin{bmatrix} \underset{\sim}{0} \\ \hline \underset{\sim}{B}_{n_E} \underset{\sim}{E}_{n_E} \end{bmatrix} \right) \end{aligned} \tag{100}$$

Now, since $\underset{\sim}{f}_C(\cdot)$ is a C^μ-strictly-increasing diffeomorphic state function mapping $\mathbb{R}^{n_C}$ onto $\mathbb{R}^{n_C}$, so is the function $\underset{\sim}{f}_C\left(\cdot + \begin{bmatrix} \underset{\sim}{0} \\ \hline \underset{\sim}{B}_{n_E} \underset{\sim}{E}_{n_E} \end{bmatrix}\right)$.

Using <u>Theorem A-4</u>, (b), the right side of (100) tends to $+\infty$ as $\|\underset{\sim}{v}_C\| \to \infty$.

Thus, for $\underset{\sim}{v}_C$ in (98),

$$\lim_{\|\tilde{\underset{\sim}{v}}_C\|\to\infty} \|\tilde{\underset{\sim}{f}}_C(\tilde{\underset{\sim}{v}}_C)\| \geq \lim_{\|\tilde{\underset{\sim}{v}}_C\|\to\infty} \frac{1}{\|\underset{\sim}{v}_C\|} \underset{\sim}{v}_C^T \underset{\sim}{f}_C\left(\underset{\sim}{v}_C + \begin{bmatrix} \underset{\sim}{0} \\ \hline \underset{\sim}{B}_E \underset{\sim}{n}_E \end{bmatrix}\right)$$

$$= \lim_{\|\underset{\sim}{v}_C\|\to\infty} \frac{1}{\|\underset{\sim}{v}_C\|} \underset{\sim}{v}_C^T \underset{\sim}{f}_C\left(\underset{\sim}{v}_C + \begin{bmatrix} \underset{\sim}{0} \\ \hline \underset{\sim}{B}_E \underset{\sim}{n}_E \end{bmatrix}\right) = +\infty \quad \blacksquare \tag{101}$$

In Theorem 2a, conditions are given so that the port vector $\begin{pmatrix} \underset{\sim}{v}_p \\ \underset{\sim}{i}_p \end{pmatrix} \in \mathbb{R}^{2n_p}$ of a resistive n_p-port N is a function of the resistor vector $\begin{pmatrix} \underset{\sim}{v}_R \\ \underset{\sim}{i}_R \end{pmatrix} \in \mathbb{R}^{2n_R}$. In the following theorem, we form network $\mathcal{N}$ from N by attaching capacitors and inductors to the ports; conditions are then given so that the capacitor and inductor waveforms $\begin{pmatrix} \underset{\sim}{v}_p(t) \\ \underset{\sim}{i}_p(t) \end{pmatrix}$ are functions of the resistor waveforms $\begin{pmatrix} \underset{\sim}{v}_R(t) \\ \underset{\sim}{i}_R(t) \end{pmatrix}$. To motivate the non-trivial nature of the following result, let us consider the examples of Fig. 13.[15]

The linear two-port of Fig. 13a has a linear capacitor and linear inductor connected to the ports. Now, the two-port is not strictly passive even though the linear resistor is strictly passive, because (Theorem 2b) the ports form a loop. Indeed,

$$\begin{pmatrix} i_C \\ v_L \end{pmatrix} = -\underset{\sim}{g}_p \begin{pmatrix} v_C \\ i_L \end{pmatrix} = -\begin{bmatrix} \frac{1}{R} & 1 \\ -1 & 0 \end{bmatrix} \begin{pmatrix} v_C \\ i_L \end{pmatrix} \tag{102}$$

and $\underset{\sim}{g}_p$ is not a strictly passive function. But for any two resistor waveforms $\begin{pmatrix} v_R(t) \\ i_R(t) \end{pmatrix}'$, $\begin{pmatrix} v_R(t) \\ i_R(t) \end{pmatrix}''$ and for the two corresponding capacitor

---

[15] In Fig. 13, all elements are linear; this is so that their solutions may easily be derived. However, these examples and the next theorem apply equally well to nonlinear networks.

and inductor waveforms $\begin{pmatrix} v_C(t) \\ v_L(t) \\ i_C(t) \\ i_L(t) \end{pmatrix}'$, $\begin{pmatrix} v_C(t) \\ v_L(t) \\ i_C(t) \\ i_L(t) \end{pmatrix}''$

we have

$$\left[\begin{pmatrix} v_R(t) \\ i_R(t) \end{pmatrix}' = \begin{pmatrix} v_R(t) \\ i_R(t) \end{pmatrix}'' \ \forall\ t \geq 0\right] \Rightarrow \left[\begin{pmatrix} v_C(t) \\ v_L(t) \\ i_C(t) \\ i_L(t) \end{pmatrix}' = \begin{pmatrix} v_C(t) \\ v_L(t) \\ i_C(t) \\ i_L(t) \end{pmatrix}'' \ \forall\ t \geq 0\right] \tag{103}$$

which is similar to (31). To show (103) is true, observe that since every $v_R(\cdot)$ is a C^∞-function of t, we have

$$\begin{bmatrix} v_C(t) \\ v_L(t) \\ i_C(t) \\ i_L(t) \end{bmatrix} = \begin{bmatrix} v_R(t) \\ v_R(t) \\ C\dfrac{dv_R(t)}{dt} \\ -1/R\ v_R(t) - C\dfrac{dv_R(t)}{dt} \end{bmatrix} \tag{104}$$

This equation is similar to (30), except that (104) expresses <u>waveforms</u> of the capacitor and inductor in terms of the <u>waveforms</u> of the internal resistors.

We cannot write equations similar to (103) and (104) for the network of Fig. 13b; for example, corresponding to the two sets of resistor waveforms

$$\begin{pmatrix} v_R^1(t) \\ v_R^2(t) \\ v_R^3(t) \end{pmatrix}' = \begin{pmatrix} v_R^1(t) \\ v_R^2(t) \\ v_R^3(t) \end{pmatrix}'' = \begin{pmatrix} 0 \\ 0 \\ 0 \end{pmatrix} \quad \forall\ t \geq 0 \tag{105a}$$

we observe that

$$\begin{pmatrix} v_C^1(t) \\ v_C^2(t) \\ i_L^1(t) \end{pmatrix}' = \begin{pmatrix} 0 \\ 0 \\ 0 \end{pmatrix} \neq \begin{pmatrix} \beta \\ \beta \\ 0 \end{pmatrix} = \begin{pmatrix} v_C^1(t) \\ v_C^2(t) \\ i_L^3(t) \end{pmatrix}'' \quad \forall\ t \geq 0 \tag{105b}$$

are two different admissible waveforms for the capacitors and inductor, for any $\beta \neq 0$.

Similarly, for the network of Fig. 13c, for the two resistor voltage waveforms

$$v_R'(t) = v_R''(t) = 0 \quad \forall\ t \geq 0 \tag{106a}$$

we observe that

$$\begin{pmatrix} v_C^1(t) \\ v_C^2(t) \end{pmatrix}' = \begin{pmatrix} 0 \\ 0 \end{pmatrix} \neq \begin{pmatrix} \beta \sin\ t/\sqrt{LC} \\ \beta \sin\ t/\sqrt{LC} \end{pmatrix} = \begin{pmatrix} v_C^1(t) \\ v_C^2(t) \end{pmatrix}'' \tag{106b}$$

are two admissible waveforms for the capacitor for any $\beta \neq 0$.

Using the <u>Inductor-Capacitor Loop-Cutset Hypothesis</u> -- henceforth called the <u>L.C. Hypothesis</u> -- introduced below we will show in Theorem 12 that for networks satisfying this hypothesis we can write equations of the form (103) and (104). This result plays a crucial role in studying the behavior of waveforms of dynamic nonlinear networks. In [12] and [13], we show that dynamic nonlinear autonomous networks (such as that of Fig. 13a) satisfying the <u>L.C. Hypothesis</u> have unique globally, asymptotically stable equilibrium points, and nonautonomous networks satisfying the <u>L.C. Hypothesis</u> have unique steady state solutions. Conversely, networks violating the <u>L.C. Hypothesis</u> (such as in Fig. 13b and Fig. 13c) may have more than one equilibrium point or more than one steady-state solution.

Inductor-Capacitor Loop-Cutset Hypothesis

Let $\mathcal{N}$ be a dynamic, nonlinear network containing capacitors, inductors, resistors and independent sources. The capacitors and inductors are described by $\underset{\sim}{f}_p(\cdot)$ in (3), where $\underset{\sim}{f}_p(\cdot)$ is a C^1-state function. Then

(i) Each loop (resp., each cutset) formed by an independent source exclusively with capacitors, inductors and other independent sources contains at least one capacitor, at least one inductor, and at least one current source (resp., voltage source).

(ii) Let $\mathcal{S}$ be any set of capacitors and inductors so that any capacitor or inductor in $\mathcal{S}$ forms a loop and/or cutset exclusively with other capacitors and/or inductors of $\mathcal{S}$. Let at least one of the following conditions be satisfied:

(a) There is a capacitor C_j in $\mathcal{S}$ which is in a loop formed exclusively with elements of $\mathcal{S}$, but not in a cutset formed exclusively with elements of $\mathcal{S}$. This capacitor is not coupled[16] to any other capacitor in $\mathcal{S}$.

(b) There is an inductor L_j in $\mathcal{S}$ which is in a cutset formed exclusively with elements of $\mathcal{S}$, but not in a loop formed exclusively with elements in $\mathcal{S}$. Furthermore, this inductor is not coupled to any other inductor in $\mathcal{S}$.

Remarks: 1. As in the condition of Theorem 4, the above conditions can be verified by inspection. (For example, the network of Fig. 13a satisfies the L.C. Hypothesis, in particular, (a) of (ii) is satisfied. The networks of Fig. 13b and Fig. 13c violate (ii).)

[16] That is, for any other capacitor C_k in $\mathcal{S}$, $\dfrac{\partial q_C^j}{\partial v_C^k} \equiv \dfrac{\partial q_C^k}{\partial v_C^j} \equiv 0$.

We can replace (ii) with the following more succinct though stronger condition:

(ii)' Each loop (resp., cutset) formed exclusively by capacitors and inductors contains a capacitor (resp., inductor) which is a one-port element and which is not in a cutset (resp., loop) formed exclusively with capacitors and inductors.

2. As part of condition (ii), note that cutsets formed exclusively by capacitors, and loops formed exclusively by inductors are prohibited. On the other hand, loops of capacitors and cutsets of inductors are allowed.

<u>Theorem 12</u>: Assume $\mathcal{N}$ satisfies the <u>L.C. Hypothesis</u>. Let $\underset{\sim}{u}_S \in \mathbb{R}^{n_S}$ represent the independent sources, and assume that the voltage and current waveforms of each element of $\mathcal{N}$ are C^1-functions of time. Then, there is a continuous function $\underset{\sim}{h}_{\mathcal{N}}$ such that for each set of network waveforms $\begin{pmatrix} \underset{\sim}{v}_p(t) \\ \underset{\sim}{i}_p(t) \end{pmatrix}$ and $\begin{pmatrix} \underset{\sim}{v}_R(t) \\ \underset{\sim}{i}_R(t) \\ \underset{\sim}{u}_S(t) \end{pmatrix}$, we have

$$\begin{pmatrix} \underset{\sim}{v}_p(t) \\ \underset{\sim}{i}_p(t) \end{pmatrix} = \underset{\sim}{h}_{\mathcal{N}} \begin{pmatrix} \underset{\sim}{v}_R(t) \\ \underset{\sim}{i}_R(t) \\ \underset{\sim}{u}_S(t) \end{pmatrix} \tag{107}$$

Furthermore, for any pair of waveforms $\begin{pmatrix} \underset{\sim}{v}_p(t) \\ \underset{\sim}{i}_p(t) \end{pmatrix}'$, and $\begin{pmatrix} \underset{\sim}{v}_p(t) \\ \underset{\sim}{i}_p(t) \end{pmatrix}''$ defined for $t \geq 0$, and the corresponding pair $\begin{pmatrix} \underset{\sim}{v}_R(t) \\ \underset{\sim}{i}_R(t) \end{pmatrix}'$ and $\begin{pmatrix} \underset{\sim}{v}_R(t) \\ \underset{\sim}{i}_R(t) \end{pmatrix}''$ corresponding to the same $\underset{\sim}{u}_S(t)$, we have

$$\left[\begin{pmatrix} \underset{\sim}{v}_R(t) \\ \underset{\sim}{i}_R(t) \end{pmatrix}' = \begin{pmatrix} \underset{\sim}{v}_R(t) \\ \underset{\sim}{i}_R(t) \end{pmatrix}'' \quad \forall\, t \geq 0 \right] \Rightarrow \left[\begin{pmatrix} \underset{\sim}{v}_p(t) \\ \underset{\sim}{i}_p(t) \end{pmatrix}' = \begin{pmatrix} \underset{\sim}{v}_p(t) \\ \underset{\sim}{i}_p(t) \end{pmatrix}'' \forall\, t \geq 0 \right] \tag{108}$$

<u>Remarks</u>: 1. The function $h_{\mathcal{N}}$ in (107) is not a map from $\mathbb{R}^{2n_R+n_S}$ into $\mathbb{R}^{2n_p}$. Rather, for <u>every</u> compact time interval $D_t = [t_1, t_2]$ $0 \leq t_1 < t_2$, it is a continuous map from elements of the Banach space of

C^1-functions $\begin{pmatrix} \underset{\sim}{v}_R(\cdot) \\ \underset{\sim}{i}_R(\cdot) \\ \underset{\sim}{u}_S(\cdot) \end{pmatrix}: D_t \to \mathbb{R}^{2n_p+n_S}$ into the Banach space of C^1-functions $\begin{pmatrix} \underset{\sim}{v}_p(\cdot) \\ \underset{\sim}{i}_p(\cdot) \end{pmatrix}: D_t \to \mathbb{R}^{2n_p}$. That is, suppose at time $t_0 \geq 0$, $\begin{pmatrix} \underset{\sim}{v}_R(t_0) \\ \underset{\sim}{i}_R(t_0) \\ \underset{\sim}{u}_S(t_0) \end{pmatrix}$ is known, then $\begin{pmatrix} \underset{\sim}{v}_p(t_0) \\ \underset{\sim}{i}_p(t_0) \end{pmatrix}$ cannot be uniquely determined; indeed, this is true when the capacitors and inductors form a loop or cutset as is shown in Theorem 3. However, if the waveform $\begin{pmatrix} \underset{\sim}{v}_R(t) \\ \underset{\sim}{i}_R(t) \\ \underset{\sim}{u}_S(t) \end{pmatrix}$ defined for $t \geq 0$ is known, then the waveform $\begin{pmatrix} \underset{\sim}{v}_p(t) \\ \underset{\sim}{i}_p(t) \end{pmatrix}$ can be determined using $h_{\mathcal{N}}$ in (107).

2. Equation (107) is a generalization of (104), and is similar to (30) of Theorem 2 and (53) of Theorem 4. Equation (108) is a generalization of (103) and is similar to (31) of Theorem 2.

<u>Proof</u>: Clearly, if $h_{\mathcal{N}}$ exists and (107) is correct, then (108) follows. The proof that $h_{\mathcal{N}}$ exists is similar to the proof that h_N exists in Theorem 4. We will show that for each capacitor and inductor the voltage waveform and current waveform depend continuously on $\begin{pmatrix} \underset{\sim}{v}_R(t) \\ \underset{\sim}{i}_R(t) \\ \underset{\sim}{u}_S(t) \end{pmatrix}$. First, we examine the independent sources. Condition (i) means that each voltage source does not form a loop exclusively with capacitors, inductors and other voltage sources. Then, using the Colored Arc Corollary, each voltage source forms a cutset exclusively with resistors and current sources. Thus it follows from KCL that currents of each voltage source is a continuous (actually C^∞) function of the resistor currents and current source currents. In a dual way the voltage of each current source is a continuous function of the resistor voltages and voltage source voltages.

Let $\mathcal{S}_1$ be the (maximal) set of inductors and capacitors so that a capacitor or inductor in $\mathcal{S}_1$ forms a loop and/or forms a cutset

exclusively with other capacitors and inductors. Let $\mathcal{S}_1^c$ be the set of inductors and capacitors not in $\mathcal{S}_1$. Each inductor and capacitor in $\mathcal{S}_1^c$ does not form a loop or cutset with capacitors and inductors, so by applying the Colored Arc Corollary, every element of $\mathcal{S}_1^c$ forms a loop and forms a cutset exclusively with resistors and sources. Thus, the voltage and current waveforms of capacitors and inductors in $\mathcal{S}_1^c$ are a continuous (actually C^∞) function of $\begin{pmatrix} \underset{\sim}{v}_R(t) \\ \underset{\sim}{i}_R(t) \\ \underset{\sim}{u}_S(t) \end{pmatrix}$.

Assume capacitor $C_j \in \mathcal{S}_1$ satisfies (a) of condition (ii) (if (b) is satisfied, the proof is identical). Using the Colored Arc Corollary, we see that the capacitor forms a loop exclusively with resistors, independent sources, and capacitors and inductors in $\mathcal{S}_1^c$. Thus, applying KVL, $v_C^j(t)$ is a continuous function of $\begin{pmatrix} \underset{\sim}{v}_R(t) \\ \underset{\sim}{i}_R(t) \\ \underset{\sim}{u}_S(t) \end{pmatrix}$. Also, because of the coupling condition, $q_C^j(t)$ is a continuous function of $\begin{pmatrix} \underset{\sim}{v}_R(t) \\ \underset{\sim}{i}_R(t) \\ \underset{\sim}{u}_S(t) \end{pmatrix}$. Now, by assumption, the capacitor current $i_C^j(t)$ is a continuously differentiable function of time, so waveform $i_C^j(t) \triangleq \frac{d}{dt} q_C^j(t)$ also depends solely upon waveforms $\begin{pmatrix} \underset{\sim}{v}_R(t) \\ \underset{\sim}{i}_R(t) \\ \underset{\sim}{u}_S(t) \end{pmatrix}$.[17]

We proceed as in Theorem 4; let $\mathcal{S}_2 \subseteq \mathcal{S}_1$ be the set of capacitors and inductors so that every element of $\mathcal{S}_2$ forms a loop and/or cutset exclusively with other capacitors and inductors excluding C_j. Then $\mathcal{S}_2^c \supseteq \mathcal{S}_1^c$ contains all the other capacitors and inductors, and their

[17] This illustrates why $h_{\mathcal{N}}$ in (107) is a map between linear spaces of waveforms; the only way to have capacitor current $i_C^j(t)$ depend upon the vector $[v_R^T(t),\ i_R^T(t),\ u_S^T(t)]^T$ is to let $i_C^j(t)$ be the time-derivative of $q_C^j(t)$.

voltage and current waveforms are continuous functions of $\begin{pmatrix} \underset{\sim}{v}_R(t) \\ \underset{\sim}{i}_R(t) \\ \underset{\sim}{u}_S(t) \end{pmatrix}$.

Assume that, say, there is an inductor L_k satisfying (b) of (ii). As with capacitor C_j above, the voltage and current waveforms of L_k are continuous functions of $\begin{pmatrix} \underset{\sim}{v}_R(t) \\ \underset{\sim}{i}_R(t) \\ \underset{\sim}{u}_S(t) \end{pmatrix}$. We continue in this way; forming sets $\mathcal{S}_3 \subseteq \mathcal{S}_2$, $\mathcal{S}_4 \subseteq \mathcal{S}_3$, etc. Each set $\mathcal{S}_j$ contains at least one element less than set $\mathcal{S}_{j-1}$. Hence for some integer ℓ, $n_p \geq \ell \geq 1$, $\mathcal{S}_\ell$ is the empty set; all capacitors and inductors and inductors are in $\mathcal{S}_\ell^c$, and $\begin{pmatrix} \underset{\sim}{v}_p(t) \\ \underset{\sim}{i}_p(t) \end{pmatrix}$ depends continuously on $\begin{pmatrix} \underset{\sim}{v}_R(t) \\ \underset{\sim}{i}_R(t) \\ \underset{\sim}{u}_S(t) \end{pmatrix}$. ∎

VI. Conclusion

The majority of the results of this paper are based upon Theorem 2. This theorem, together with its extensions (Theorems 3, 4 and 12) show how to relate the external port variables $\begin{pmatrix} \underset{\sim}{v}_p \\ \underset{\sim}{i}_p \end{pmatrix}$ of an n_p-port N to the internal resistor variables $\begin{pmatrix} \underset{\sim}{v}_R \\ \underset{\sim}{i}_R \end{pmatrix}$. Under the weak condition that the <u>ports form neither loops nor cutsets</u>, we are able to derive (30) of Theorem 2; the port vector is a linear function of the internal resistor vector. This conclusion is based solely on graph-theoretic principles, and does not involve the element constitutive relations. Similar functional relationships h_N in (53) of Theorem 4, and $h_{\mathcal{N}}$ in (107) of Theorem 13 also exist where, in these cases, element constitutive relations are used. We believe that these relationships between internal and external n_p-port variables have applications beyond their use in this paper.

When capacitors and inductors are attached to N, thus forming $\mathcal{N}$,

our results lead to interesting conditions concerning how the capacitors and inductors are attached; loops of capacitors and cutsets of inductors are allowed, because these loops and cutsets may be deleted upon application of Theorem 11. On the other hand, if we wish to use the various theorems stemming from Theorem 2, then loops of inductors and cutsets of capacitors are not allowed. This is a reverse type of condition usually found in theorems dealing with n-ports and state equations. We interpret this phenomenon in the following way: Assume in network $\mathcal{N}$ there is a loop of capacitors. Then, there is a "redundant" capacitor whose voltage is linearly dependent upon the other capacitor voltage, and we may delete this capacitor using the methods of Theorem 11. We form a new network $\tilde{\mathcal{N}}$ which has no loop of capacitors and is equivalent to $\mathcal{N}$ in the sense that the voltages and currents of the remaining elements are the same. On the other hand, assume in $\mathcal{N}$ there is a cutset of capacitors. Then the dependent capacitor variables -- the capacitor currents -- are linearly dependent. In this sense, there is a "redundant" capacitor, but there is no method analogous to Theorem 11 to delete it, hence (see Fig. 13b and Eq. (105)) for each set of network resistor currents and capacitor currents there may be more than one set of possible capacitor voltages.

In [12] and [13], we analyze the differential equations (8a) and (8b) describing $\mathcal{N}$. We then use the results given here to derive ways of predicting network behavior by examining the constitutive relations of the network elements.

APPENDIX

Discussion of Theorem A

Theorem A-1.

When h: $\mathbb{R}^1 \to \mathbb{R}^1$ is differentiable, and increasing, we know that its slope $\frac{dh(x)}{dx}$ is non-negative for all $x \in \mathbb{R}^1$. Definition 3 extends the concept of an increasing function to $\mathbb{R}^n$, and if we view the positive-definiteness of the matrix $\frac{\partial \underset{\sim}{h}(\underset{\sim}{x})}{\partial \underset{\sim}{x}}$ as the "slope" of the C^1-function $\underset{\sim}{h}$: $\mathbb{R}^n \to \mathbb{R}^n$, then Theorem A-1 yields the same conclusion. We prove (iii) as an illustration of the methods involved.

Proof of Theorem A-1, (iii)

First, if C^1-function $\underset{\sim}{h}$: $\mathbb{R}^n \to \mathbb{R}^n$ is uniformly increasing, then by the definition of the (Frechet) derivative of a vector-valued function [20],

$$\begin{aligned}
\underset{\sim}{w}^T \frac{\partial \underset{\sim}{h}(\underset{\sim}{x})}{\partial \underset{\sim}{x}} \underset{\sim}{w} &= \underset{\sim}{w}^T \lim_{\varepsilon \to 0} \frac{1}{\varepsilon} [\underset{\sim}{h}(\underset{\sim}{x}+\varepsilon \underset{\sim}{w}) - \underset{\sim}{h}(\underset{\sim}{x})] \\
&= \lim_{\varepsilon \to 0} \frac{1}{\varepsilon^2} [(\underset{\sim}{x}+\varepsilon \underset{\sim}{w}) - \underset{\sim}{x}]^T [\underset{\sim}{h}(\underset{\sim}{x}+\varepsilon \underset{\sim}{w}) - \underset{\sim}{h}(\underset{\sim}{x})] \\
&\geq \lim_{\varepsilon \to 0} \frac{1}{\varepsilon^2} \gamma \|\varepsilon \underset{\sim}{w}\|^2 \\
&= \gamma \|\underset{\sim}{w}\|^2 \qquad \forall\ \underset{\sim}{w} \in \mathbb{R}^n, \text{ and } \forall\ \underset{\sim}{x} \in \mathbb{R}^n
\end{aligned} \tag{A-1}$$

So for any $0 < \lambda < \gamma$, the matrix

$$\frac{\partial \underset{\sim}{h}(\underset{\sim}{x})}{\partial \underset{\sim}{x}} - \underset{\sim}{1}_n \lambda \tag{A-2}$$

is positive-definite for all $\underset{\sim}{x} \in \mathbb{R}^n$.

Conversely, if (A-2) is positive-definite for all $\underset{\sim}{x} \in \mathbb{R}^n$, then using the Integral Form of the Mean Value Theorem [20],

$$[\underset{\sim}{x}' - \underset{\sim}{x}'']^T [\underset{\sim}{h}(\underset{\sim}{x}') - \underset{\sim}{h}(\underset{\sim}{x}'')] = \int_0^1 [\underset{\sim}{x}' - \underset{\sim}{x}'']^T \frac{\partial h(\underset{\sim}{x}''+\sigma(\underset{\sim}{x}'-\underset{\sim}{x}''))}{\partial \underset{\sim}{x}} [\underset{\sim}{x}'-\underset{\sim}{x}''] d\sigma$$

$$\geq \int_0^1 [\underset{\sim}{x}' - \underset{\sim}{x}'']^T \lambda [\underset{\sim}{x}' - \underset{\sim}{x}''] d\sigma$$

$$= \lambda \|\underset{\sim}{x}' - \underset{\sim}{x}''\|^2 \qquad \blacksquare \qquad \text{(A-3)}$$

Theorem A-2.

This theorem is known as Palais' Theorem [21], though it is proved also in [20]. Since $\underset{\sim}{h}$: $\mathbb{R}^n \to \mathbb{R}^n$ is a local C^μ-diffeomorphism at every $\underset{\sim}{x} \in \mathbb{R}^n$ if, and only if, $\frac{\partial \underset{\sim}{h}(\underset{\sim}{x})}{\partial \underset{\sim}{x}}$ is nonsingular, the condition $\lim_{\|\underset{\sim}{x}\| \to \infty} \|\underset{\sim}{h}(\underset{\sim}{x})\| = +\infty$ by itself guarantees the injective and surjective nature of $\underset{\sim}{h}$. See [24] for a discussion of the way the condition $\lim_{\|\underset{\sim}{x}\| \to \infty} \|\underset{\sim}{h}(\underset{\sim}{x})\| = +\infty$ is derived.

Theorem A-3.

Conclusion (i) is clearly true by definition. We prove (ii). This will also show that, as in Theorem A-4, if $\underset{\sim}{h}$ is uniformly increasing, then (14) is true.

Proof of Theorem A-3, (ii)

For all $\underset{\sim}{x} \neq \underset{\sim}{0}$,

$$\|\underset{\sim}{h}(\underset{\sim}{x})\| = \frac{1}{\|\underset{\sim}{x}\|} \|\underset{\sim}{x}\| \cdot \|\underset{\sim}{h}(\underset{\sim}{x})\|$$

$$\geq \frac{1}{\|\underset{\sim}{x}\|} \underset{\sim}{x}^T \underset{\sim}{h}(\underset{\sim}{x})$$

$$= \frac{1}{\|\underset{\sim}{x}\|} \underset{\sim}{x}^T [\underset{\sim}{h}(\underset{\sim}{x}) - \underset{\sim}{h}(\underset{\sim}{0})] + \frac{1}{\|\underset{\sim}{x}\|} \underset{\sim}{x}^T \underset{\sim}{h}(\underset{\sim}{0})$$

$$\geq \frac{1}{\|\underset{\sim}{x}\|} \gamma \|\underset{\sim}{x}\|^2 - \frac{1}{\|\underset{\sim}{x}\|} \cdot \|\underset{\sim}{x}\| \cdot \|\underset{\sim}{h}(\underset{\sim}{0})\|$$

$$= \gamma \|\underset{\sim}{x}\| - \|\underset{\sim}{h}(\underset{\sim}{0})\| \qquad \text{(A-4)}$$

Hence,

$$\lim_{\|\underset{\sim}{x}\|\to\infty} \|\underset{\sim}{h}(\underset{\sim}{x})\| \geq \lim_{\|\underset{\sim}{x}\|\to\infty} \frac{1}{\|\underset{\sim}{x}\|} \underset{\sim}{x}^T \underset{\sim}{h}(\underset{\sim}{x}) \geq \lim_{\|\underset{\sim}{x}\|\to\infty} \gamma\|\underset{\sim}{x}\| - \|\underset{\sim}{h}(\underset{\sim}{0})\| = +\infty \quad \blacksquare \tag{A-5}$$

<u>Theorem A-4</u>.

We have already shown (14) when $\underset{\sim}{h}$ is uniformly increasing. See [12] for the proof of (14) when $\underset{\sim}{h}$ is a C^{μ}-strictly-increasing diffeomorphic state function mapping $\mathbb{R}^n$ onto $\mathbb{R}^n$.

REFERENCES

[1] S. Seshu and M. B. Reed, Linear Graphs and Electrical Networks. Reading, Mass.: Addison-Wesley, 1961.

[2] W. K. Chen, Applied Graph Theory. Amsterdam: North-Holland Pub. Co., 1971.

[3] C. A. Desoer and E. S. Kuh, Basic Circuit Theory. New York: McGraw-Hill, 1969.

[4] L. O. Chua and R. A. Rohrer, "On the Dynamic Equations of a Class of Nonlinear RLC Networks," IEEE Trans. Circuit Theory, vol. CT-12, pp. 475-489, December 1965.

[5] C. A. Desoer and F. Wu, "Trajectories of Nonlinear RLC Networks: A Geometric Approach," IEEE Trans. Circuit Theory, vol. CT-19, pp. 562-571, November 1972.

[6] L. O. Chua and J. D. McPherson, "Explicit Topological Formulation of Lagrangian and Hamiltonian Equations for Nonlinear Networks," IEEE Trans. Circuits and Systems, vol CAS-21, pp. 277-285, March 1974.

[7] R. J. Duffin, "Nonlinear Networks (I, III, and IV)," Bull. Amer. Math. Soc., vol. 52 and 55, and Proc. Amer. Math. Soc., vol. 1, pp. 836-838, 119-129, and 233-240, 1946, 1949, 1950.

[8] ———, "Exponential Decay in Nonlinear Networks," Proc. Amer. Math. Soc., vol. 7, pp. 1094-1106, December 1956.

[9] R. K. Brayton and J. K. Moser, "A Theory of Nonlinear Networks," Quart. Appl. Math., vol. 22, pp. 1-33, 81-104, April and July 1964.

[10] R. Liu and L. V. Auth, Jr., "Qualitative Synthesis of Nonlinear Networks," 1963 Proc. First Annual Allerton Conf. on Circuit and System Theory, pp. 330-343.

[11] L. O. Chua, "Stationary Principles and Potential Functions for Nonlinear Networks," Journ. Franklin Institute, vol. 296, pp. 91-114, August 1973.

[12] L. O. Chua and D. N. Green, "A Qualitative Analysis of the Behavior of Dynamic Nonlinear Networks: Stability of Autonomous Networks," College of Engineering, Univ. Calif., Berkeley, Memo ERL-M508, 1975.

[13] ———, "A Qualitative Analysis of the Behavior of Dynamic Nonlinear Networks: Steady-State Solutions of Nonautonomous Networks," College of Engineering, Univ. of Calif., Berkeley, Memo ERL-M509, 1975.

[14] V. A. Pliss, Nonlocal Problems of the Theory of Oscillations, New York: Academic Press, 1966.

[15] J. K. Hale, Ordinary Differential Equations, New York: Wiley-Interscience, 1969.

[16] M. W. Hirsch and S. Smale, Differential Equations, Dynamical Systems and Linear Algebra, New York: Academic Press, 1974.

[17] G. J. Minty, "Solving Steady-State Nonlinear Networks of 'Monotone' Elements," IRE Trans. on Circuit Theory, vol. CT-8, pp. 99-104, June 1961.

[18] B. Gopinath and D. Mitra, "When are Transistors Passive?" B.S.T.J., 50, No. 8, (October 1971), pp. 2835-2847.

[19] T. E. Stern, Theory of Nonlinear Networks and Systems, An Introduction, Reading, Mass.: Addison-Wesley, 1965.

[20] J. M. Ortega and W. C. Rheinholdt, Iterative Solutions of Nonlinear Equations in Several Variables, New York: Academic Press, 1970, pp. 165-169.

[21] R. S. Palais, "Natural Operations on Differential Forms," Trans. Amer. Math. Soc., vol. 92 (1959), pp. 125-141.

[22] C. A. Desoer, Notes for a Second Course on Linear Systems, New York: Van Nostrand Reinhold Company, 1971, p. 46.

[23] L. O. Chua and P-M Lin, Computer Aided Analysis of Electronic Circuits: Algorithms and Computational Techniques, Englewood Cliffs, N. J.: Prentice-Hall, 1975.

[24] L. O. Chua and Y-F Lam, "Global Homeomorphisms of Vector-Valued Functions," Journ. Math. Analysis and Appl., vol. 39, No. 3, pp. 600-624, September, 1972.

FIGURE CAPTIONS

Fig. 1 A Dynamic Nonlinear Network $\mathcal{N}$.

Fig. 2 A Set of Branches Connected to a Node $\eta_{⓪}$. Illustration of the Colored Arc Corollary.

Fig. 3 Counterexample to Conjecture 1. Ports 1 and 2 are Voltage-Driven. Port 3 is Current-Driven.

Fig. 4 The Three-Port of Fig. 3 with an Extra Resistor Attached.

Fig. 5 (a) A One-Port which has no Inverse of Equation (30); (b) The Characteristic of Resistor R^1; (c) The Characteristic of Resistor R^2.

Fig. 6. A Two-Port for Illustrating the Derivation of h_N in Equation (53).

Fig. 7 (a) The Function $g_R^1(\cdot)$; (b) The Function $\underset{\sim}{g}_R^2(\cdot)$. These functions are Eventually Strictly Passive, but the Composite Function $\underset{\sim}{g}_R = (g_R^1, g_R^2)$ is not Eventually Strictly Passive.

Fig. 8 A Current-Driven One-Port Containing a Voltage-Controlled Uniformly-Increasing Resistor. The One-Port Function $g_p(\cdot)$ is not Uniformly Increasing.

Fig. 9 Illustration of Theorem 8. The Sources may be Time-Varying.

Fig. 10 The n_p-port N with n_S Time-Varying Sources Modeled as an (n_p+n_S)-port.

Fig. 11 Forming $\mathcal{N}$ from $\tilde{\mathcal{N}}$ by Short-circuiting an Inductor Originally Attached to Node $\eta_{⓪}$.

Fig. 12 Illustrations of Proof of Step 1, Theorem 11.

Fig. 13 Example and Two Counter-Examples of Theorem 12.

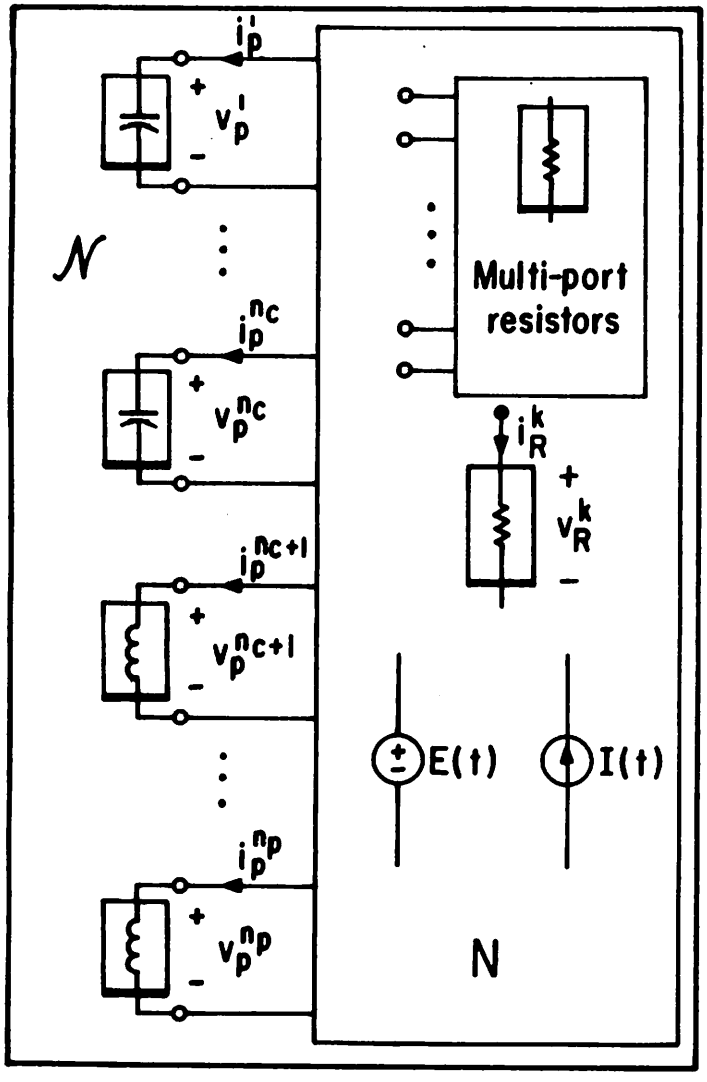

Fig. 1

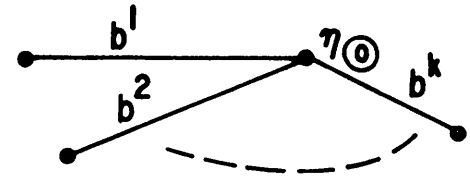

Fig. 2

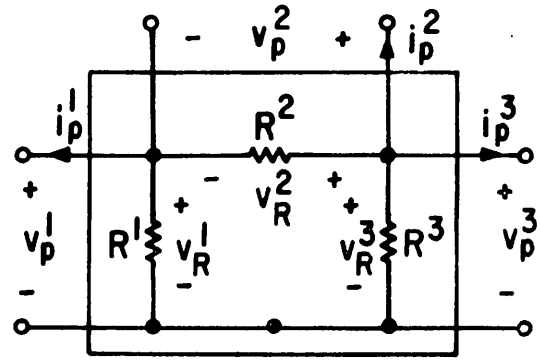

Fig. 3

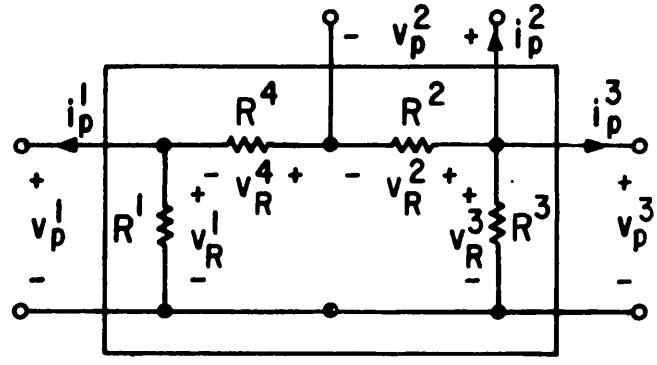

Fig. 4

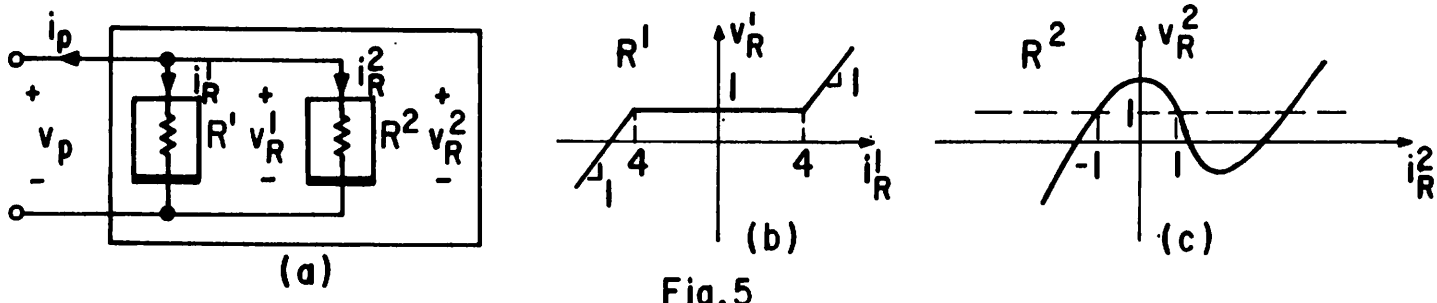

Fig. 5

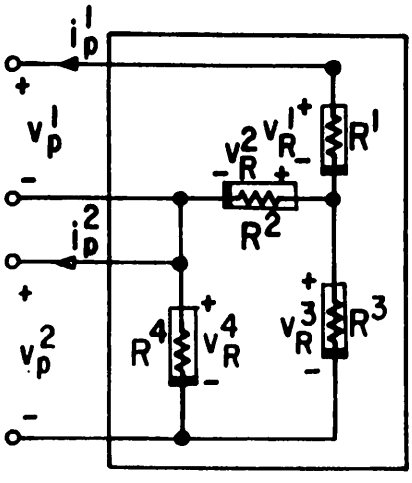

Fig. 6

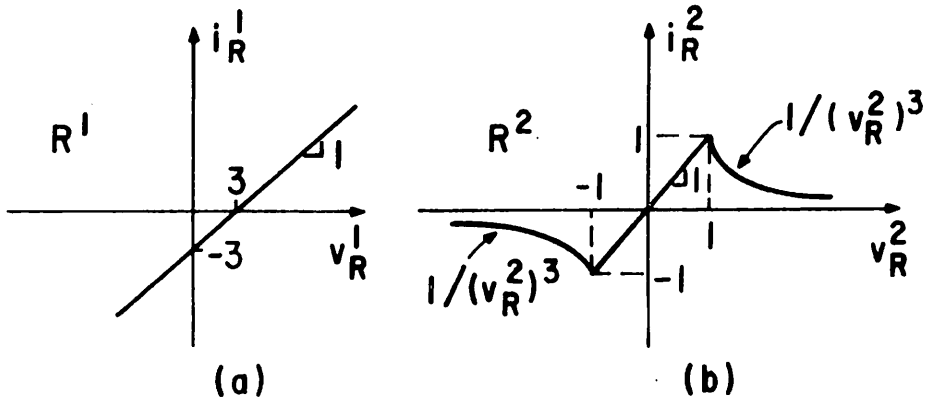

Fig. 7

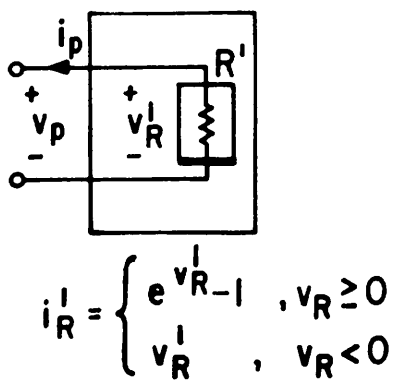

$$i_R^1 = \begin{cases} e^{v_R^1} - 1 & , v_R \geq 0 \\ v_R^1 & , v_R < 0 \end{cases}$$

Fig. 8

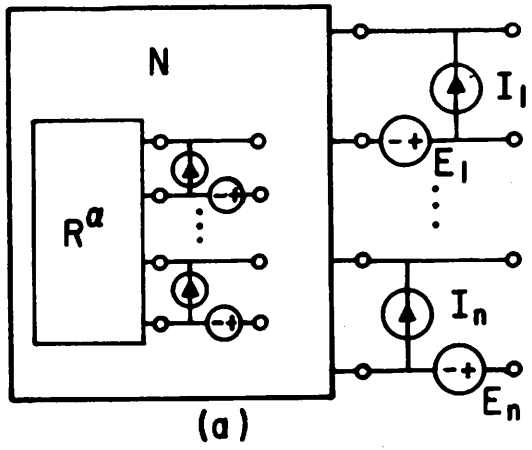

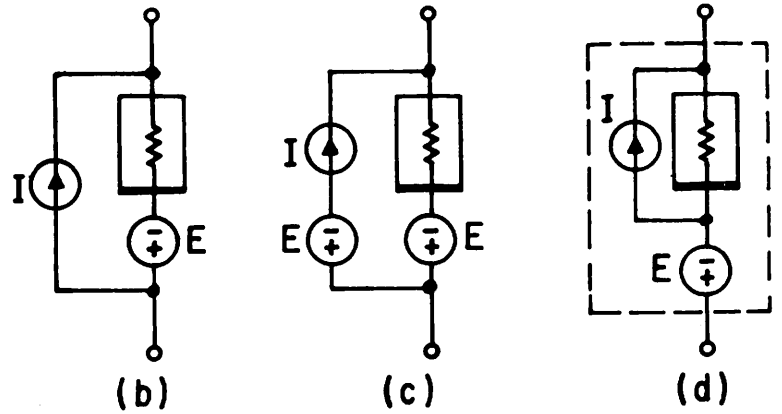

Fig. 9

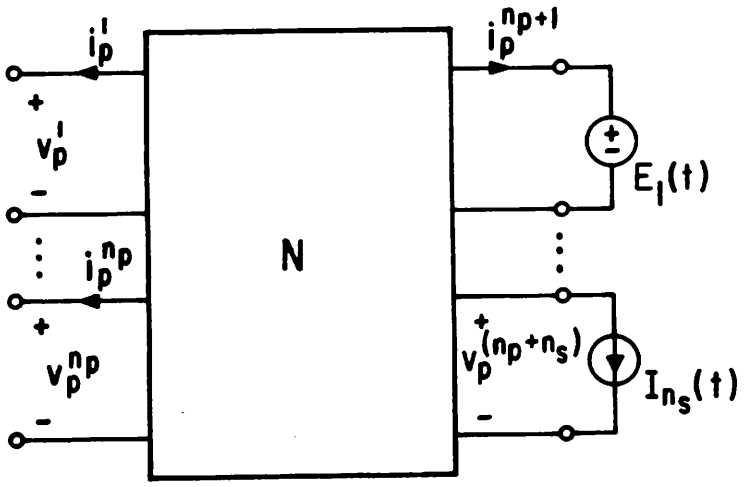

Fig. 10

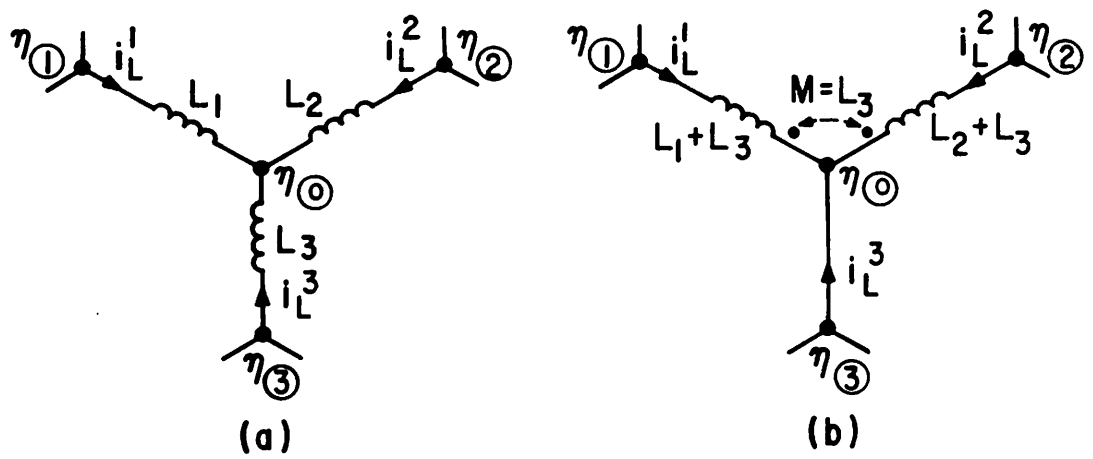

Fig. 11

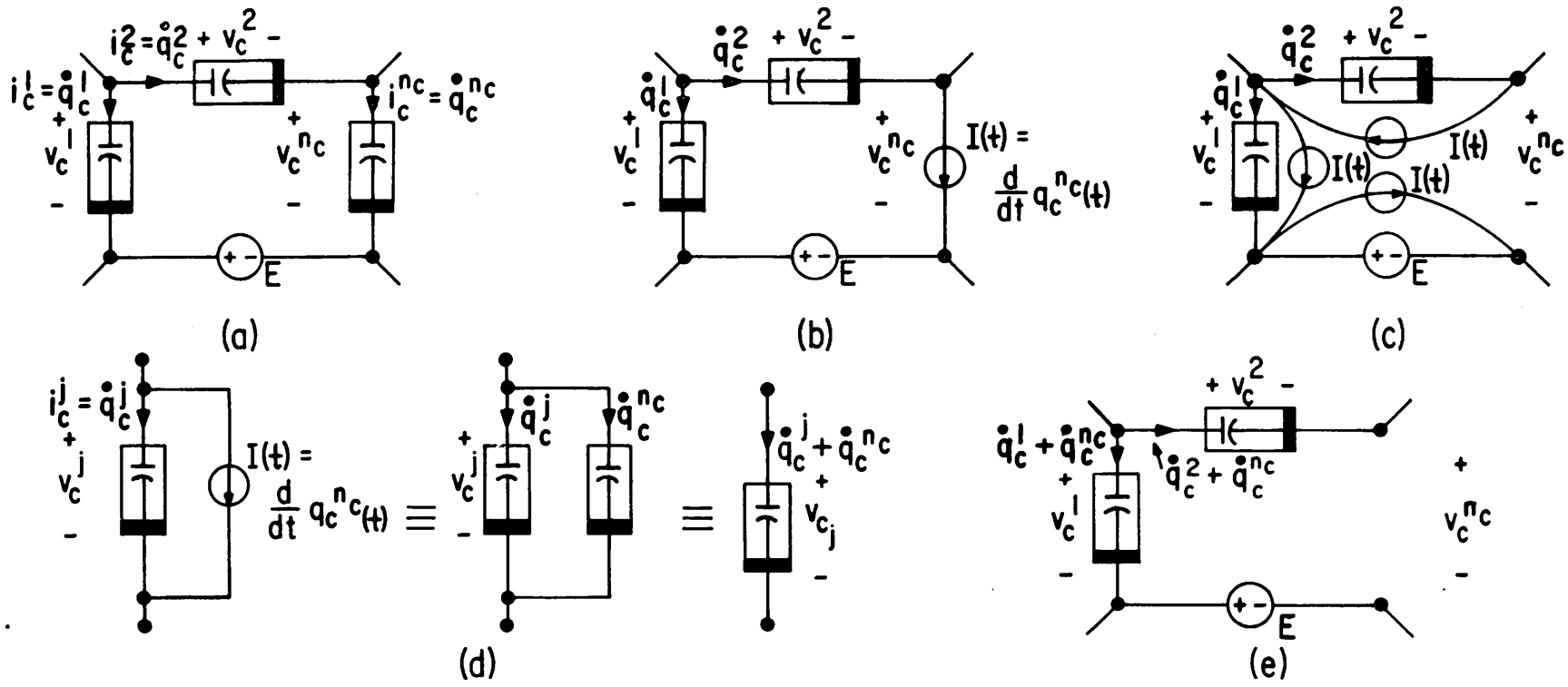

Fig. 12

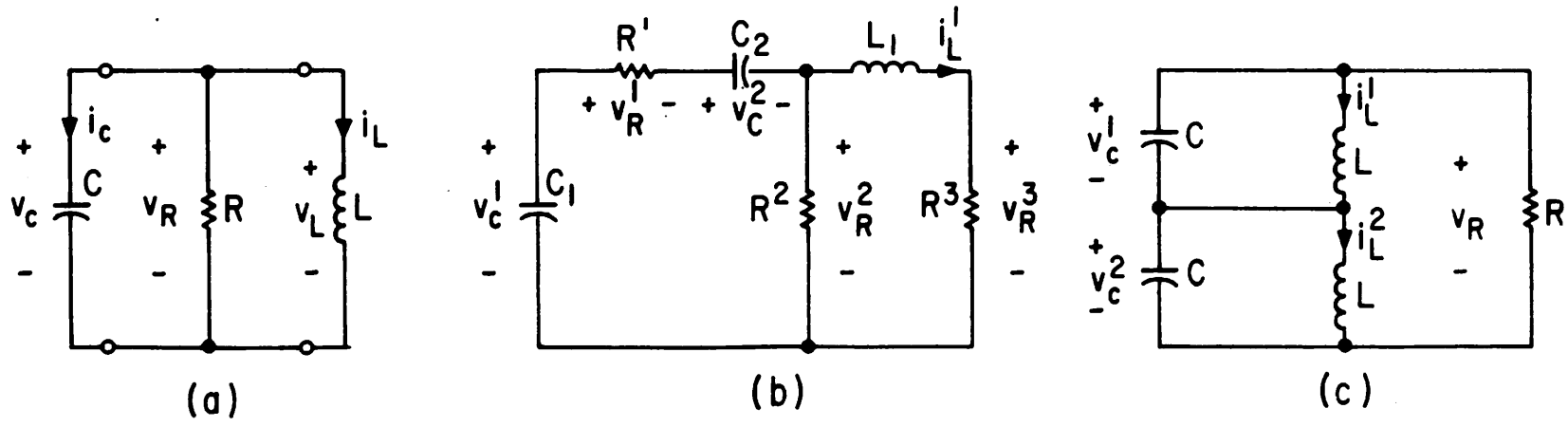

Fig. 13