Electronics Research Laboratory
University of California
Berkeley, California

# SAMPLE TRAJECTORY CALCULATIONS
## Using a Digital Computer Program*

by

J. M. Owens

G. Nirdlinger

N. R. Mantena

R. A. Rao

T. Van Duzer

The research reported herein is made possible through support received from the Departments of Army, Navy, and Air Force Office of Scientific Research under Grant AF-AFOSR 139-63.

October 10, 1963

---

*P. T. Kirstein and J. S. Hornsby, "A Fortran programme for the numerical analysis of curvilinear electrode systems," Report No. CERN 63-16, Accelerator Research Division, CERN, Geneva, Switzerland, 25 April 1963.

# FORWARD

The work described in this report was in part done by J. M. Owens as an EE 199 project with the aim of adapting the program to the University of California IBM 7090. A large part of the credit for the adaptation is due to G. Nirdlinger. N. R. Mantena is responsible for Example 5 and part of Example 4, and R. A. Rao contributed to Example 4. T. Van Duzer procured the program, and motivated the project. The program was generously supplied by P. T. Kirstein and J. S. Hornsby.

This report is intended to have a two-fold purpose: first it is the beginning of a catalog of sample calculations and, second, it will serve as a guide for programming various types of problems. Figs. 1(a) and (b) illustrate the two types of problems for which the program is suited. The gun in Fig. 1(a) is axially symmetric and may have a uniform magnetic field. The gun in Fig. 1(b) represents the general crossed-field launching system. Again provision is made in the program only for uniform magnetic fields.

The examples in this report are:

1. An axially symmetric perveance — 2 gun designed at the Watkins-Johnson Co.[1]

2. An axially symmetric perveance — 2.3 gun designed at the Hughes Aircraft Co.[2]

3. Calculation of trajections for gun of (1) using potential and charge density data from gun of (2) as initial approximation.

4. A crossed-field gun designed by R. A. Rao, University of California, Berkeley, similar to the short Kino gun.

5. A crossed-field gun designed by N. R. Mantena, University of California, Berkeley, of the form known as the Charles gun.

The tape on which the program is stored is in the library of the Electronics Research Laboratory.

Example 1: This example is of a perveance 2, axially symmetric electron gun designed at the Watkins-Johnson Co. The gun has no magnetic field.

The first step in setting up the program to find the trajectories in this gun is to graph a cross section on a convenient scale as shown

---

[1] R. Frost, "Study on solid beam guns," Interim Engineering Report No. 1, Contract No. AF 33(657)-8858, Watkins-Johnson Co. (August 1962).

[2] T. Van Duzer and G. R. Brewer, "Space-charge simulation in an electrolytic tank," J. Appl.Phys., Vol. 30, pp. 291-301 (March 1959).

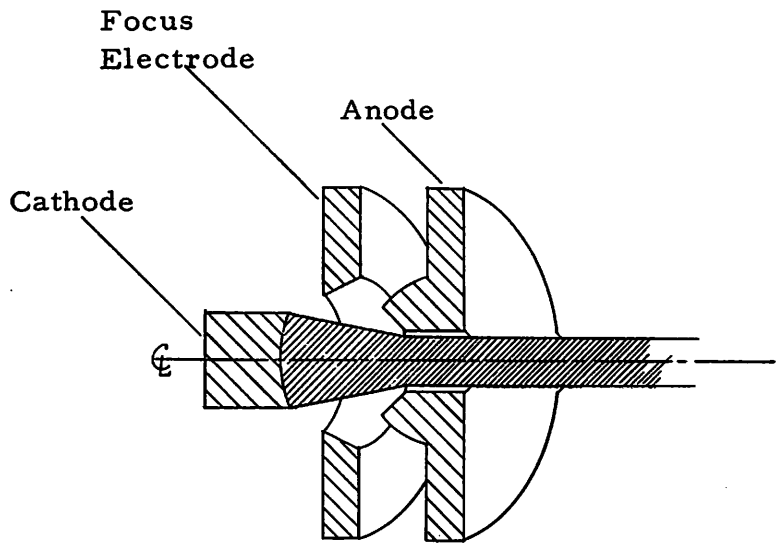


Fig. 1a Axially Symmetric Electron Gun

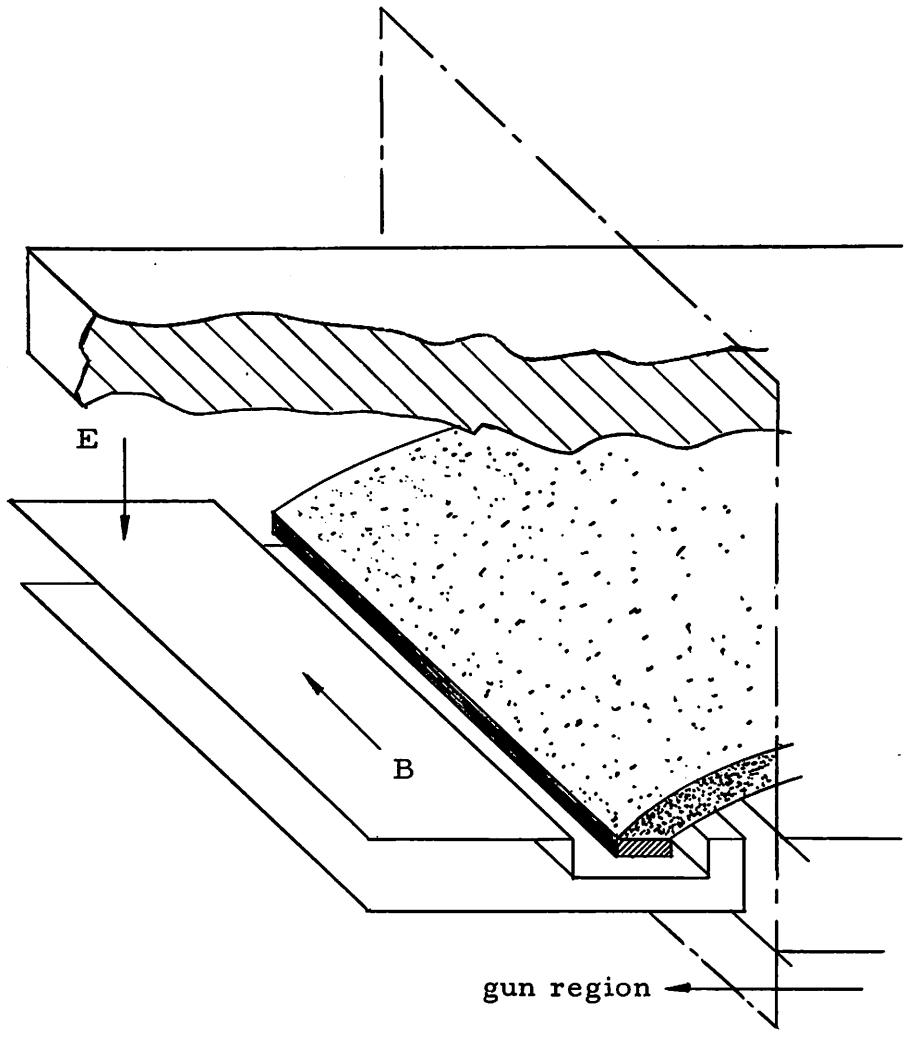


Fig. 1b General configuration of a beam-type crossed-field electron tube.

in Fig. 1-1. The shaded areas represent the actual electrodes and the broken line is the boundary used in the computer calculations. Only one half of a cross section need be drawn as the problem is symmetric. Next, points on the boundary are chosen to give a good representation of its shape. The program assumes a straight line between adjacent boundary points so the points are selected taking a maximum number of points in highly curved regions and a minimum number in straight regions. Once the points have been chosen they should be numbered for convenience.

Next, the cards are written. A set of cards for this program is shown in Table 1-1.

Table 1-1

INPUT DATA CARDS

| CARD | DATA |
|---|---|
| 1 | * JOB 858, TIME 15, PAGES 200, NAME OWENS. TRAJECTORY PR |
| 2 | * NOTE AT PAUSE 1 MOUNT FOLLOWING TAPES. |
| 3 | * TAPE 4, (PRIVATE TAPE)— CERN TRAJECTORY PROGRAM TAPE, READ. |
| 4 | * TAPE 6, SAVE TAPE REQUESTED, WRITE. |
| 5 | * NOTE AT PAUSE 2 PUSH START. |
| 6 | * NOTE AT PAUSE 3 DISMOUNT A4 AND B5. |
| 7 | * NOTE PRINT B5. |
| 8 | * NOTE IF JOB RUNS OVERTIME OR STOPS (OTHER THAN PAUSE 1, 2 OR 3) |
| 9 | * NOTE FOLLOW PROCEDURE ABOVE FOR PAUSE 3 BEFORE STARTING NEXT JOB |
| 10 | * CHAIN (5, B3) |

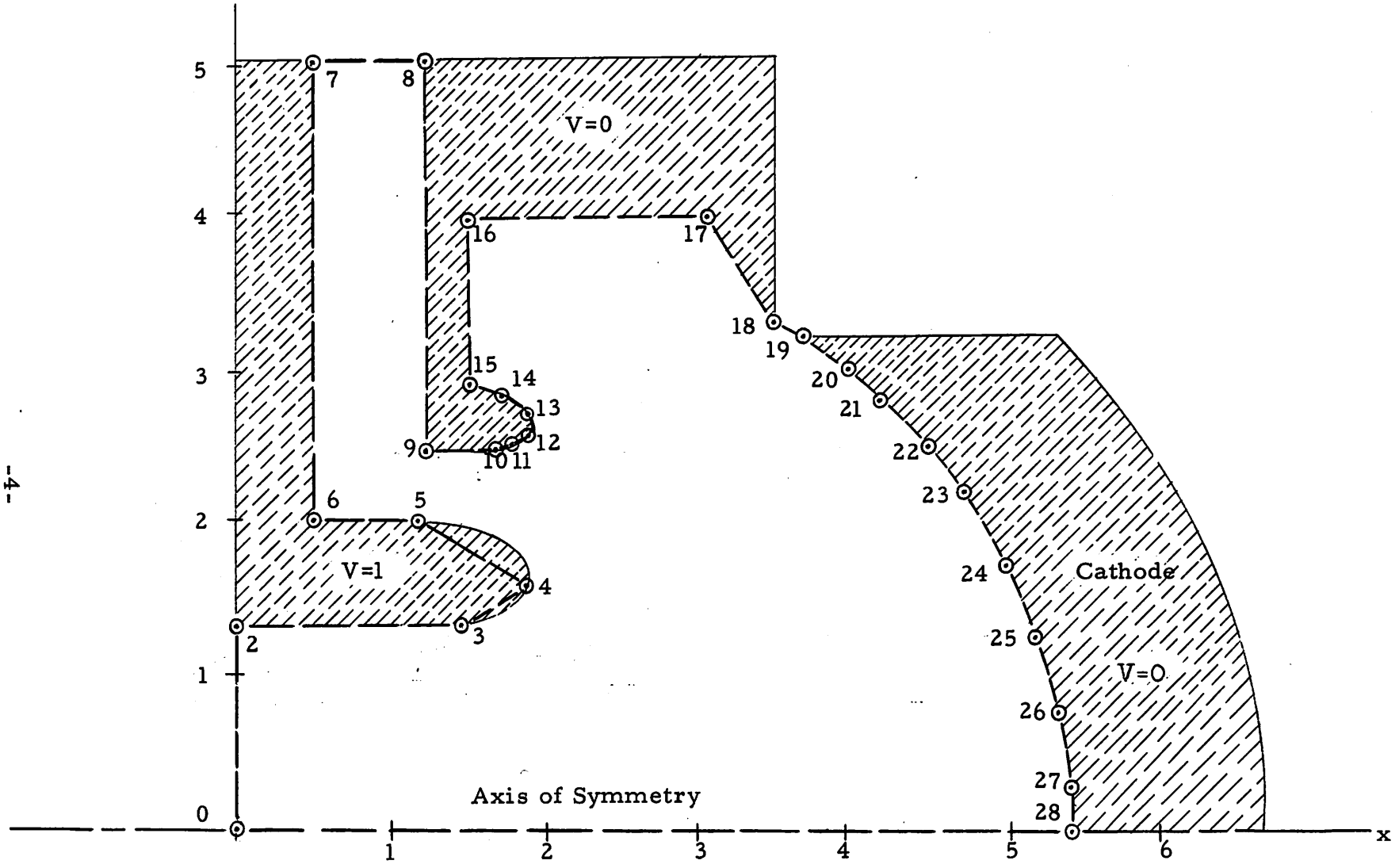
V=0
V=1
Cathode
V=0
Axis of Symmetry
x
0
1
2
3
4
5
6
7
8
9
10
11
12
13
14
15
16
17
18
19
20
21
22
23
24
25
26
27
28

Fig. 1-1

Table 1-1 (cont.)

INPUT DATA CARDS

| CARD | DATA | | | | | | |
|---|---|---|---|---|---|---|---|
| 11 | BINARY PROGRAM: CARD 1 | | | | | | |
| 12 | BINARY PROGRAM: CARD 2 | | | | | | |
| 13 | BINARY PROGRAM: CARD 3 | | | | | | |
| 14 | * DATA | | | | | | |
| 15 | 0.2 | 0.2 | | 1 | 110 | | |
| 16 | | | | 250 | | 10 | 3 |
| 17 | | | | 28 | | | |
| 18 | | | 1.0 | 251 | | | |
| 19 | | 1.35 | 1.0 | | | | |
| 20 | 1.5 | 1.35 | 1.0 | | | | |
| 21 | 1.9 | 1.6 | 1.0 | | | | |
| 22 | 1.2 | 2.0 | 1.0 | | | | |
| 23 | 0.5 | 2.0 | 1.0 | | | | |
| 24 | 0.5 | 5.0 | 1.0 | | | | |
| 25 | 1.2 | 5.0 | | | | | |
| 26 | 1.2 | 2.45 | | | | | |
| 27 | 1.7 | 2.45 | | | | | |
| 28 | 1.8 | 2.5 | | | | | |
| 29 | 1.88 | 2.6 | | | | | |
| 30 | 1.85 | 2.7 | | | | | |
| 31 | 1.7 | 2.85 | | | | | |
| 32 | 1.5 | 2.9 | | | | | |
| 33 | 1.5 | 4.0 | | | | | |
| 34 | 3.1 | 4.0 | | | | | |
| 35 | 3.5 | 3.35 | | | | | |

Table 1-1 (cont.)

INPUT DATA CARDS

| CARD | DATA | | | | | | |
|---|---|---|---|---|---|---|---|
| 36 | 3.7 | | 3.2 | | | | |
| 37 | 3.95 | | 3.0 | | | | |
| 38 | 4.2 | | 2.8 | | | | |
| 39 | 4.5 | | 2.5 | | | | |
| 40 | 4.7 | | 2.25 | | | | |
| 41 | 5.0 | | 1.75 | | | | |
| 42 | 5.2 | | 1.3 | | | | |
| 43 | 5.35 | | 0.8 | | | | |
| 44 | 5.40 | | 0.3 | | | | |
| 45 | 5.40 | | | | 251 | | |
| 46 | | | 10.0 | | | | |
| 47 | 5.0 | E-8 | 10.0 | | 11 | 19 | 28 |
| 48 | 0.5 | | 0.3 | 1.0 | 1 | 5 | |
| 49 | 0.0 | | 0.4 | 0.6 | 5 | 50 | 50 |
| 50 | 0.8 | | 1.0 | | | | |

The first 14 cards are as described in the "operator instructions."* The rest of the deck will be described below.

*Such references are to sections in P. T. Kirstein and J. S. Hornsby, "A Fortran programme for the numerical analysis of curvilinear electrode systems," Report No. CERN 63-16, Accelerator Research Division, CERN, Geneva, Switzerland, 25 April 1963.

## DECK DESCRIPTION

| CARD | COMMENT |
|---|---|
| 15 | This card contains $\Delta x$, and $\Delta y$ the mesh sizes (both = 0.2) which are chosen by the limitations on the number of meshes given in the section on "restrictions," and the accuracy required. The number 1 indicates the number of boundary curves, and 110 is the job number. |
| 16 | This card contains the type of job, in this case axially symmetric (250), the sense switch positions 1, 0 (always to be in this position) and the number 3 the time (in minutes) remaining of the total program time before the computer acts to force a termination. |
| 17 | The number on this card is the number of boundary points given in the data (28). |
| 18-45 | These cards are the boundary points and their potentials $(r, z, \phi)$. The number 251 is used to indicate all points on the r = 0 axis. |
| 46 | As this is a new problem, this card only contains $\epsilon$ the accuracy criterion for the relaxation procedure. This figure (10.0) is a good starting point. In order that time not be excessive this should not be reduced below 5.0. |
| 47 | This card contains PGES ($5 \times 10^{-8}$) the perveance density in amps/cm$^2$ which is thought to be the closest to the solution of the problem at hand, a general figure to be used is 10.0, NRAY (11) the number of rays to be traced, and NFC NLC (19, 28) the numbers of the boundary points at the start and finish of the cathode, number 1 being the first boundary point card. |

DECK DESCRIPTION (cont.)

| CARD | COMMENT |
|---|---|
| 48 | This card contains SPRNT (0.5), the distance between trajectory points, chosen by accuracy wanted, subject to limitation of 500 points, $\tau$ (0.3) the integration distance in units of mesh distance, MC (1.0) indicating equipotentials are to be plotted, MPS (1) which indicated nothing in output to be suppressed, and M1 indicating to print every M1-th trajectory. |
| 49 | This card indicates that the first three equipotentials to be printed out are: 0, 0.4, 0.6 (see also card 49 description). The 5 indicates that a total of five equipotentials are to be printed and the 50, 50 indicates that the output graph is to be 50 x 50 units. |
| 50 | This card contains the last two equipotentials to be printed: 0.8, 1.0. |

The final trajectories and equipotentials are shown in Fig. 1-2. The rays are given for each major intention in the form: t, r, z, $\dot{r}$, $\dot{z}$, $\ddot{r}$, $\ddot{z}$, and $\phi$ at each point along the ray. Table 6b of Ref. 1 shows how the data are presented. Table 6c of Ref. 1 shows a typical numerical presentation of the coordinates of points along equipotentials.

Example 2: This is an example of a perveance 2.3, axially symmetric electron gun which was designed by G. R. Brewer of the Hughes Aircraft Co. Again, in this example, the gun has no magnetic field.

This problem is quite similar to Example 1 so many of the redundant details will be omitted. As before, a graph is made and points

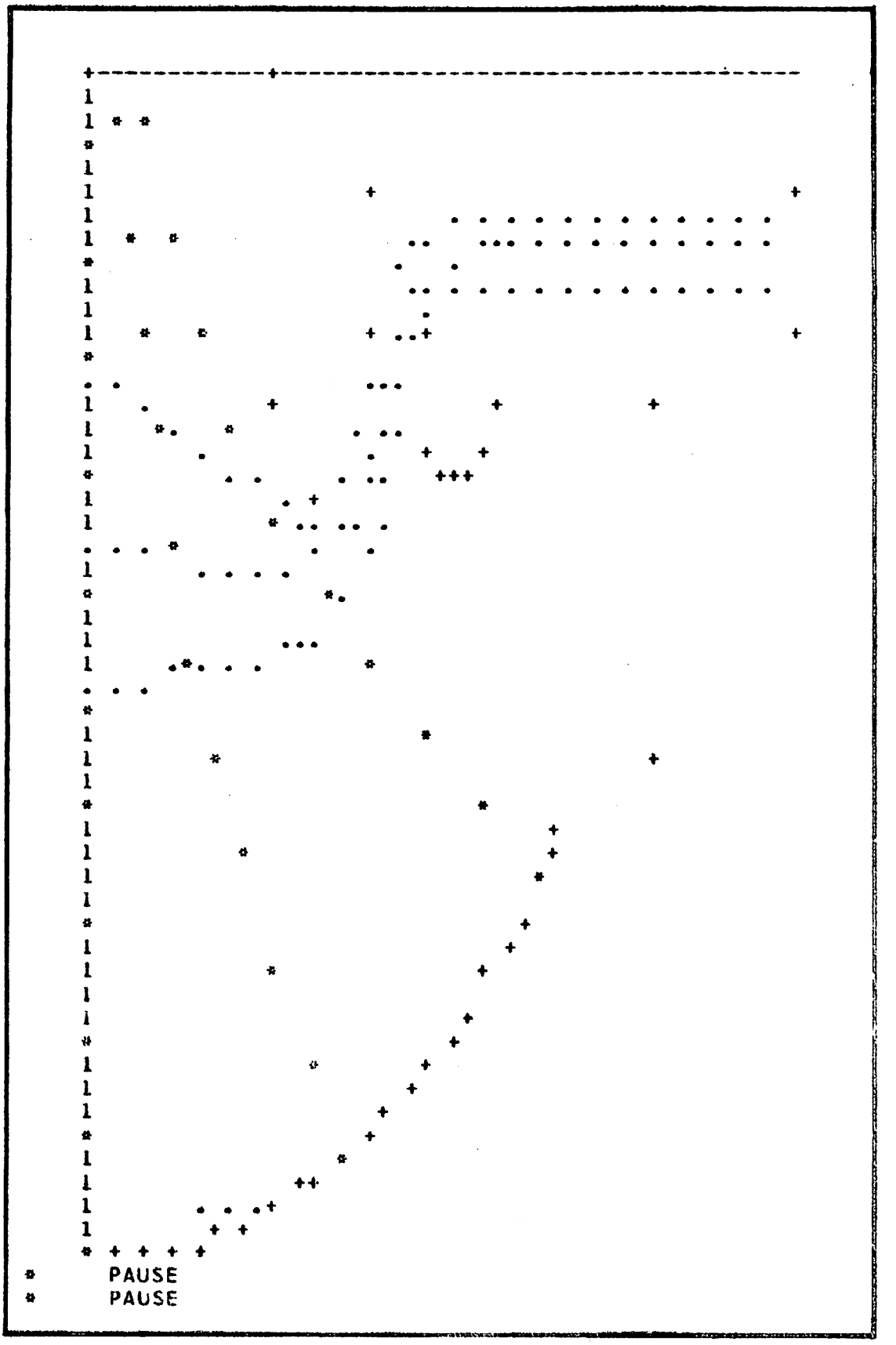


Fig. 1-2

selected to give a good boundary representation (see Fig. 2-1) next, the cards are written. The first 13 cards are a standard program set as previously described. The rest of the deck, shown in Table 2-1, will be described as before.

Table 2-1

INPUT DATA CARDS

| CARD | DATA | | | | | | |
|---|---|---|---|---|---|---|---|
| 1 | * | JOB 858, TIME 15, PAGES 200, NAME OWENS. TRAJECTORY PR | | | | | |
| 2 | * | NOTE AT PAUSE1 MOUNT FOLLOWING TAPES. | | | | | |
| 3 | * | TAPE 4, (PRIVATE TAPE)— CERN TRAJECTORY PROGRAM TAPE, READ. | | | | | |
| 4 | * | TAPE 6, REEL 1101, WRITE. | | | | | |
| 5 | * | NOTE AT PAUSE2 PUSH START. | | | | | |
| 6 | * | NOTE AT PAUSE3 DISMOUNT A4 and B5. | | | | | |
| 7 | * | NOTE PRINT B5. | | | | | |
| 8 | * | NOTE IF JOB RUNS OVERTIME OR STOPS (OTHER THAN PAUSE1. 2 OR 3) | | | | | |
| 9 | * | NOTE FOLLOW PROCEDURE ABOVE FOR PAUSE3 BEFORE STARTING NEXT JOB | | | | | |
| 10 | * | CHAIN (5, B3) | | | | | |
| 11 | | BINARY PROGRAM: CARD 1 | | | | | |
| 12 | | BINARY PROGRAM: CARD 2 | | | | | |
| 13 | | BINARY PROGRAM: CARD 3 | | | | | |
| 14 | * | DATA | | | | | |
| 15 | | 0.20 | 0.20 | | 1 | 112 | |
| 16 | | | | | 250 | | 10 3 |
| 17 | | | | | 27 | | |
| 18 | | | | 1.00 | 251 | | |
| 19 | | | 1.40 | 1.00 | | | |

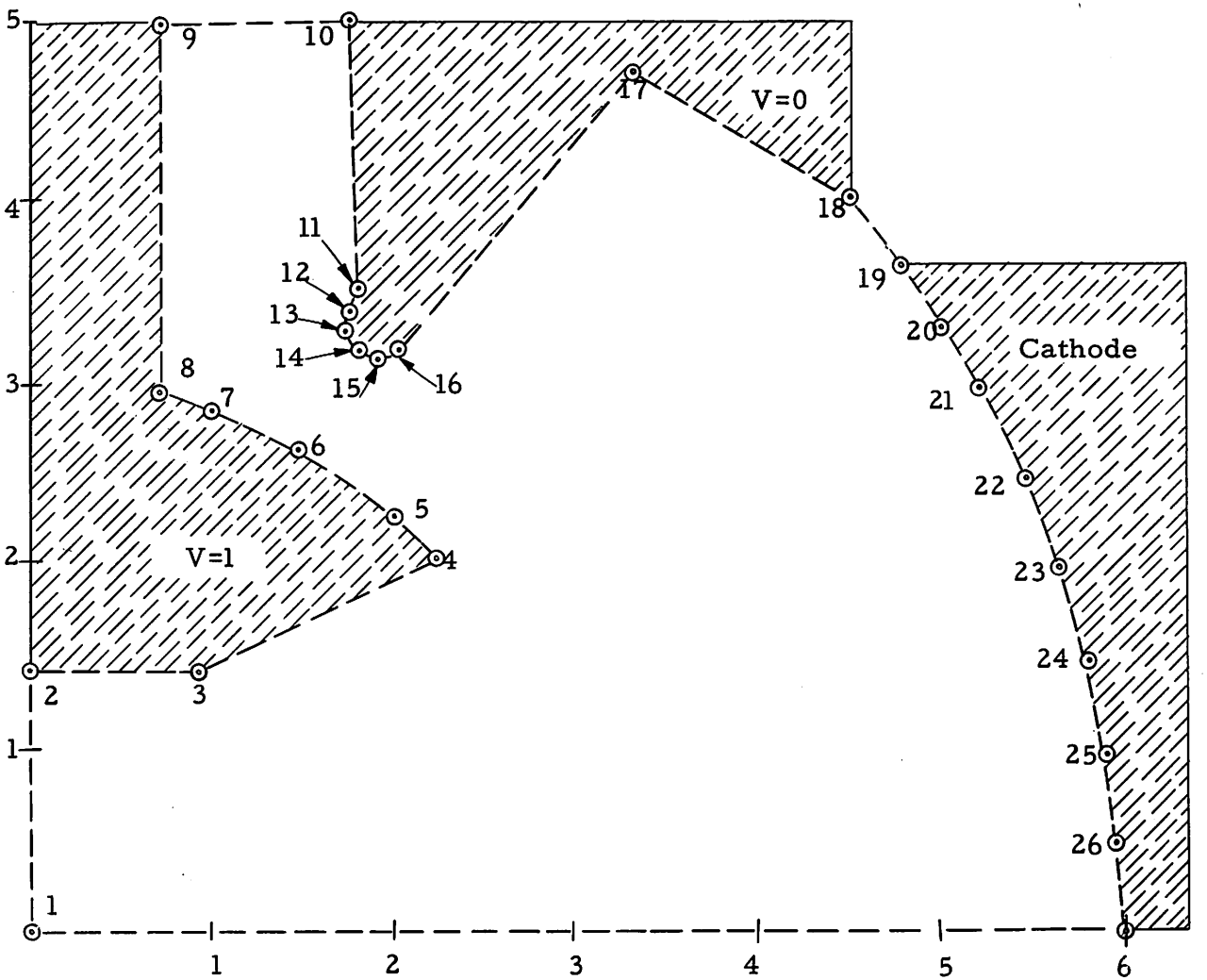
V=0
V=1
Cathode
1
2
3
4
5
6
7
8
9
10
11
12
13
14
15
16
17
18
19
20
21
22
23
24
25
26

Fig. 2-1

Table 2-1 (cont.)

INPUT DATA CARDS

| CARD | DATA | | | |
|---|---|---|---|---|
| 20 | 1.42 | 1.40 | 1.00 | |
| 21 | 2.25 | 2.02 | 1.00 | |
| 22 | 2.00 | 2.25 | 1.00 | |
| 23 | 1.50 | 2.64 | 1.00 | |
| 24 | 1.00 | 2.85 | 1.00 | |
| 25 | 0.70 | 2.95 | 1.00 | |
| 26 | .70 | 5.00 | 1.00 | |
| 27 | 1.80 | 5.00 | | |
| 28 | 1.80 | 3.50 | | |
| 29 | 1.72 | 3.40 | | |
| 30 | 1.72 | 3.30 | | |
| 31 | 1.80 | 3.27 | | |
| 32 | 1.90 | 3.15 | | |
| 33 | 2.00 | 3.19 | | |
| 34 | 3.20 | 4.70 | | |
| 35 | 4.50 | 4.05 | | |
| 36 | 4.77 | 3.70 | | |
| 37 | 5.00 | 3.33 | | |
| 38 | 5.20 | 3.00 | | |
| 39 | 5.45 | 2.59 | | |
| 40 | 5.66 | 2.00 | | |
| 41 | 5.80 | 1.50 | | |
| 42 | 5.92 | 1.00 | | |
| 43 | 5.97 | 0.50 | | |
| 44 | 6.00 | | 6.00 | 251 |

Table 2-1 (cont.)

INPUT DATA CARDS

| CARD | DATA | | | | | | |
|---|---|---|---|---|---|---|---|
| 45 | | | 1.0 | | 1 | | |
| 46 | 2.0 | E-8 | 10.0 | | 10 | 19 | 27 |
| 47 | 0.5 | | 0.3 | 1.0 | | 3 | 1 |
| 48 | 0.0 | | 0.2 | 0.4 | 6 | 100 | 100 |
| 49 | 0.6 | | 0.8 | 1.0 | | | |

DECK DESCRIPTION

| CARD | COMMENT |
|---|---|
| 15 | $\Delta x$, $\Delta y$ = 0.20 chosen by column and row limitations and accuracy. There is 1 (one) closed-boundary curve and the job number is chosen as 112. |
| 16 | The job type 250 is axially symmetric and the sense switch settings are 1, 0. The termination time is three minutes before program end. |
| 17 | There are 27 points in the boundary curve. |
| 18-44 | Boundary points and potentials. |
| 45 | The accuracy criterion is 1.0 (this was found to require 15 min. of calculation and thus is too restrictive for most uses. We suggest 5.0 as minimum). This particular datum was used for restart so INPTMK = 1 indicating that the initial potentials are to be found on another tape. |
| 46 | Here PGES, the perveance density, was chosen to be quite small, ($5 \times 10^{-8}$) and the iteration time was large. The closer PGES is to the correct value the faster the convergence. |

DECK DESCRIPTION (cont.)

| CARD | COMMENT |
|---|---|
| | $\lambda$ was chosen to be 10. 0. NRAY the number of rays = 10, NFC, NLC are the numbers assigned to the end points of the cathode and are 19 and 27, respectively. |
| 47 | SPRNT = 0. 5 $\tau$ = 0. 3<br>MC = 1 indicating graph plotting<br>MPS = 0 indicating print everything<br>M1 = 3 indicating print every third trajectory<br>NLITS = 1 indicating a restart. |
| 48 | Equipotentials to be printed at 0.0, 0.2, 0.3, a total of 6 equipotentials to be printed. Graph size 100 x 100. |
| 49 | Equipotentials at 0.6, 0.8, 1.0. |

The output is shown in Fig. 2-2 for $\epsilon$ = 20.0 which required just two major iterations and 4.41 minutes. The trajectories and equipotentials with encircled symbols represent a re-evaluation of the same problem with the error criterion $\epsilon$ = 1. 0. This calculation required 34 iterations and 15 minutes.

It is of interest to note the form of the perveance variations from step to step shown in Fig. 2-3.

Example 3: This is an example of the use of data obtained for one gun as the starting point for the calculations of trajectories in a similar gun. In particular, the gun of Example 1 was evaluated by starting with the interior potential and charge density of the gun of Example 2. The input cards are in part listed in Table 3-1. The remaining cards are the same as cards 14-49 of Example 1.

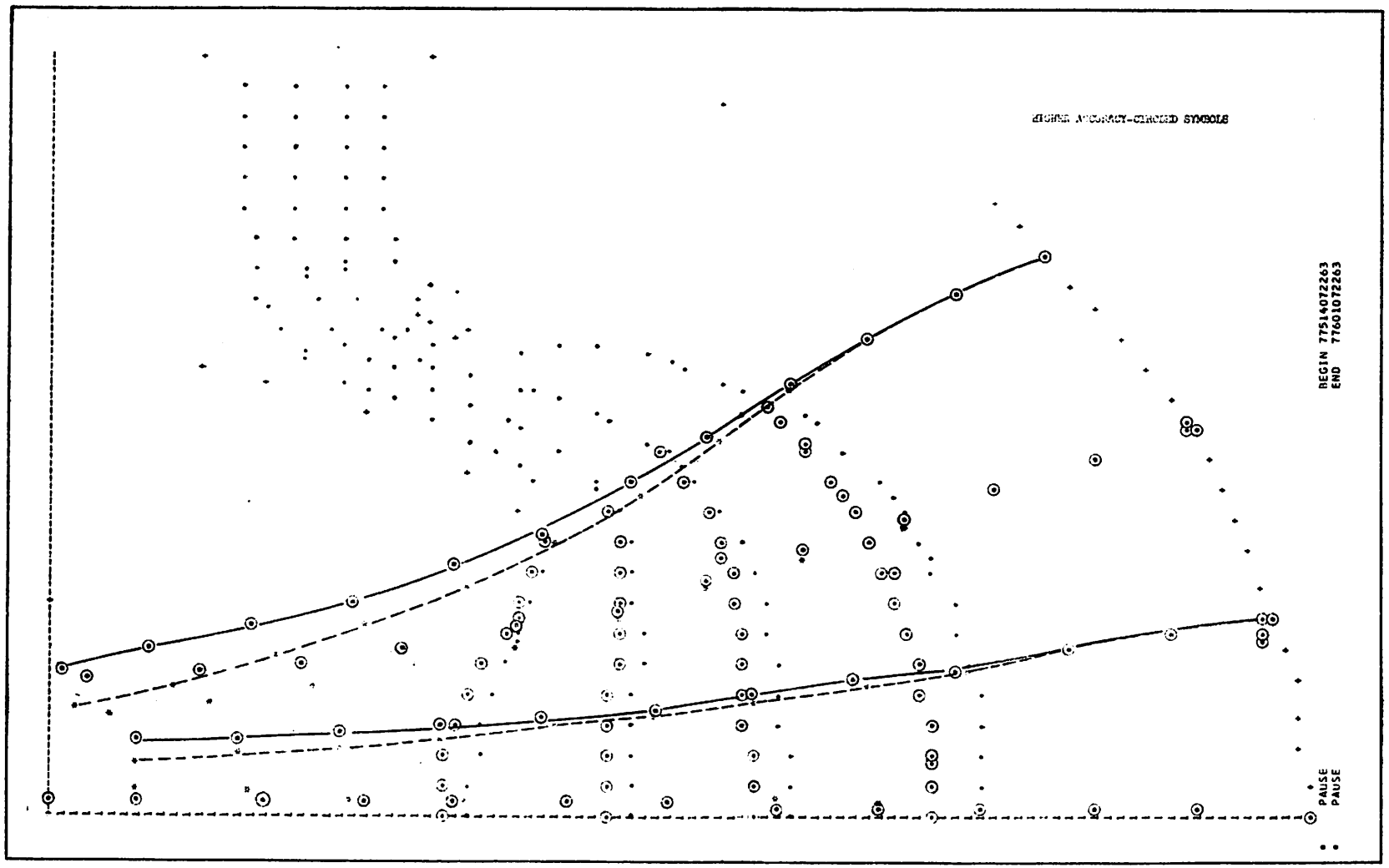
HIGHER ACCURACY-CIRCLED SYMBOLS
BEGIN 77514072263
END 77601072263
PAUSE
PAUSE

Fig. 2-2

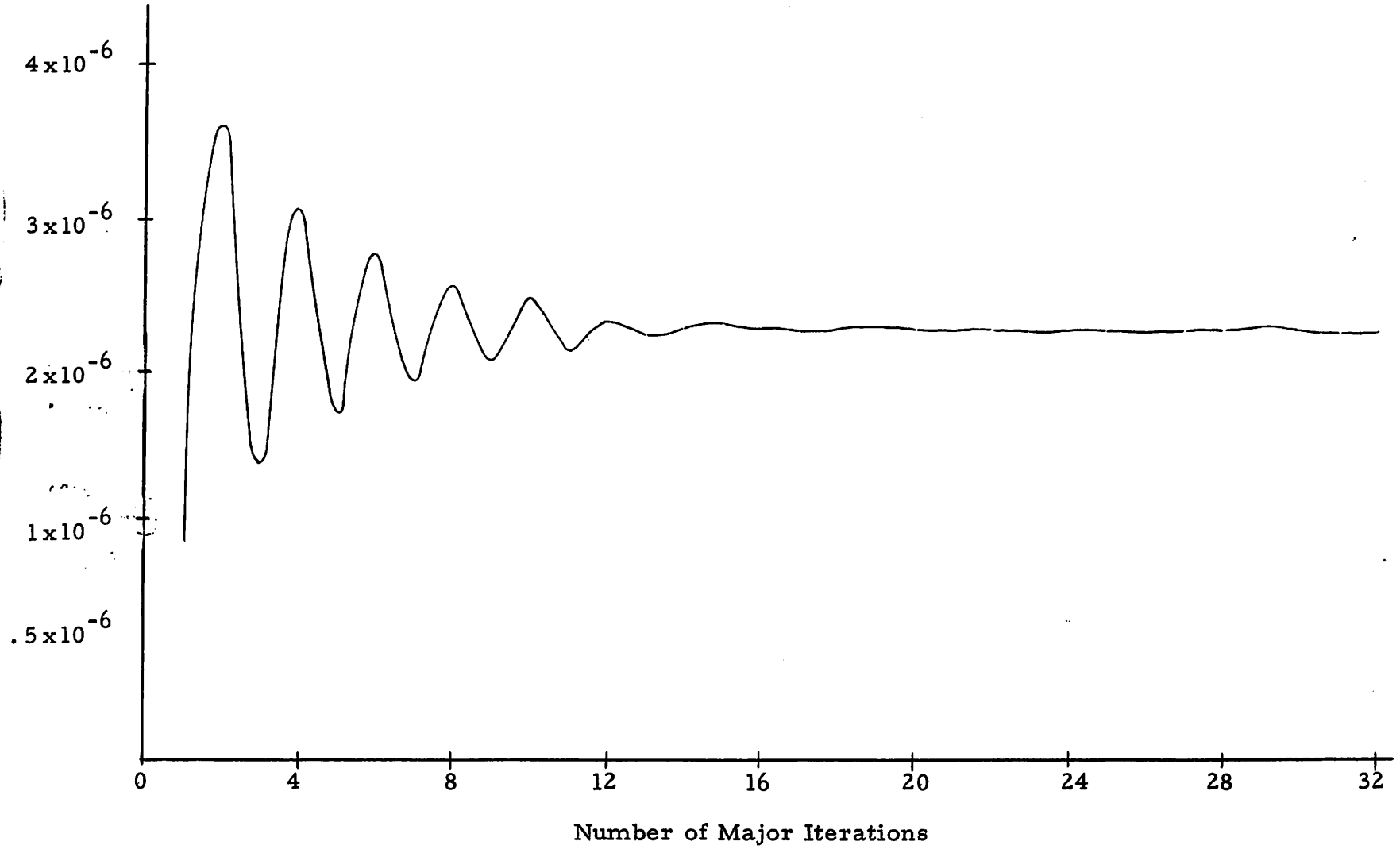


Fig. 2-3 Total Perveance in Pervs

Table 3-1

RESTART PROGRAM CARDS

| CARD | | DATA |
|---|---|---|
| 1 | * | JOB 858, TIME 15, PAGES 200, NAME OWENS, TRAJECTORY PR |
| 2 | * | NOTE AT PAUSE 1 MOUNT FOLLOWING TAPES. |
| 3 | * | TAPE 4, (PRIVATE TAPE)—CERN TRAJECTORY PROGRAM TAPE, READ. |
| 4 | * | TAPE 6, SAVE TAPE REQUESTED, WRITE. |
| 5 | * | TAPE 3, REEL 1101, READ. |
| 6 | * | NOTE AT PAUSE 2 PUSH START. |
| 7 | * | NOTE AT PAUSE 3 DISMOUNT A4, B5, and B3. |
| 8 | * | NOTE PRINT B5. |
| 9 | * | NOTE IF JOB RUNS OVERTIME OR STOPS (OTHER THAN PAUSE 1, 2 or 3) |
| 10 | * | NOTE FOLLOW PROCEDURE ABOVE FOR PAUSE 3 BEFORE STARTING NEXT JOB |
| 11 | * | CHAIN (5, B3) |
| 12 | | BINARY PROGRAM: CARD 1 |
| 13 | | BINARY PROGRAM: CARD 2 |
| 14 | | BINARY PROGRAM: CARD 3 |
| 15 | * | DATA |

The output is similar to that shown in Example 1 since the accuracy specification was also taken as 10 percent here. However, in this case the beam tracing was carried through only four times as contrasted with the 11 times in Example 1. The total time required for Example 1 was not recorded so it cannot be compared directly with the 5.0 minutes required here. However if the time data of Example 2 and the present case are plotted as shown and equal time

per step is assumed, the linear time curve intersecting the zero-step axis at 3.6 minutes is obtained as seen in Fig. 3-1. Therefore a present best guess at the minimum computing time is about 3.7 minutes. Included in the time of the present example were two pauses for loading and unloading tapes consuming an unnecessarily high 1-1/2 minutes. We will try to get more points on the curve as the program is used more.

Example 4: The fourth Example is a crossed-field planar electron gun designed by R. A. Rao similar to the short Kino gun. This gun has a crossed magnetic field and thus presents more complication than the preceding guns.

The first step is the same as before, draw a graph of the boundary and choose points which give an adequate representation of the boundary. (See Fig. 4-1.)

The problem which presents itself is what value to use for the magnetic field given the voltage, and the graph size of the gun chosen. The voltage, magnetic field, and a characteristic length in the gun to be studied, and $V_2$, $B_2$, $L_2$ are the same quantities in the computer model of the gun. For the gun studied

$V_1$ = 540 volts
$B_1 = 1.4 \times 10^{-2}$ w/m$^2$
$L_1$ = 0.00762 m (the cathode length)
(All units in mks.)

$V_2$ is always taken to be one volt. Voltages on the other electrodes are scaled with respect to this voltage. The computer model of the gun is sketched on a graph sheet. Each unit on these sheets is taken to be a meter in length by the computer. The corresponding distance $L_2$ in the computer model should be taken as the number of distance units and directly expressed in meters.

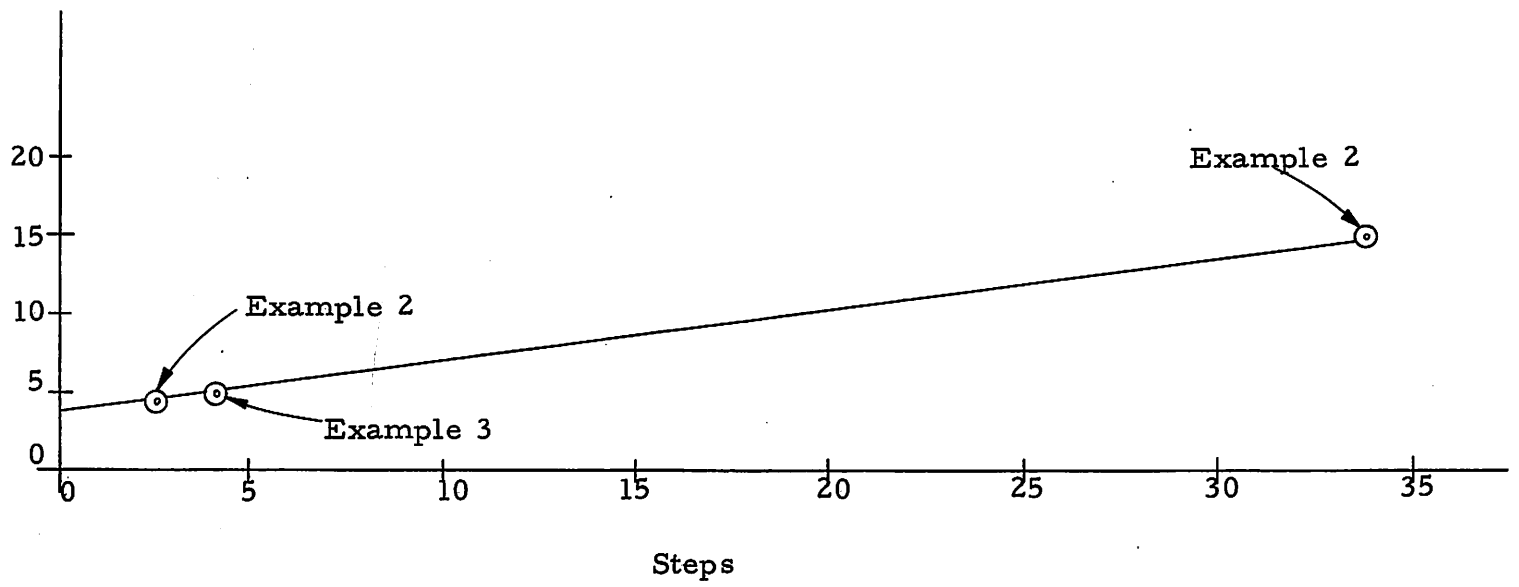


Fig. 3-1 Computing Time (minutes)

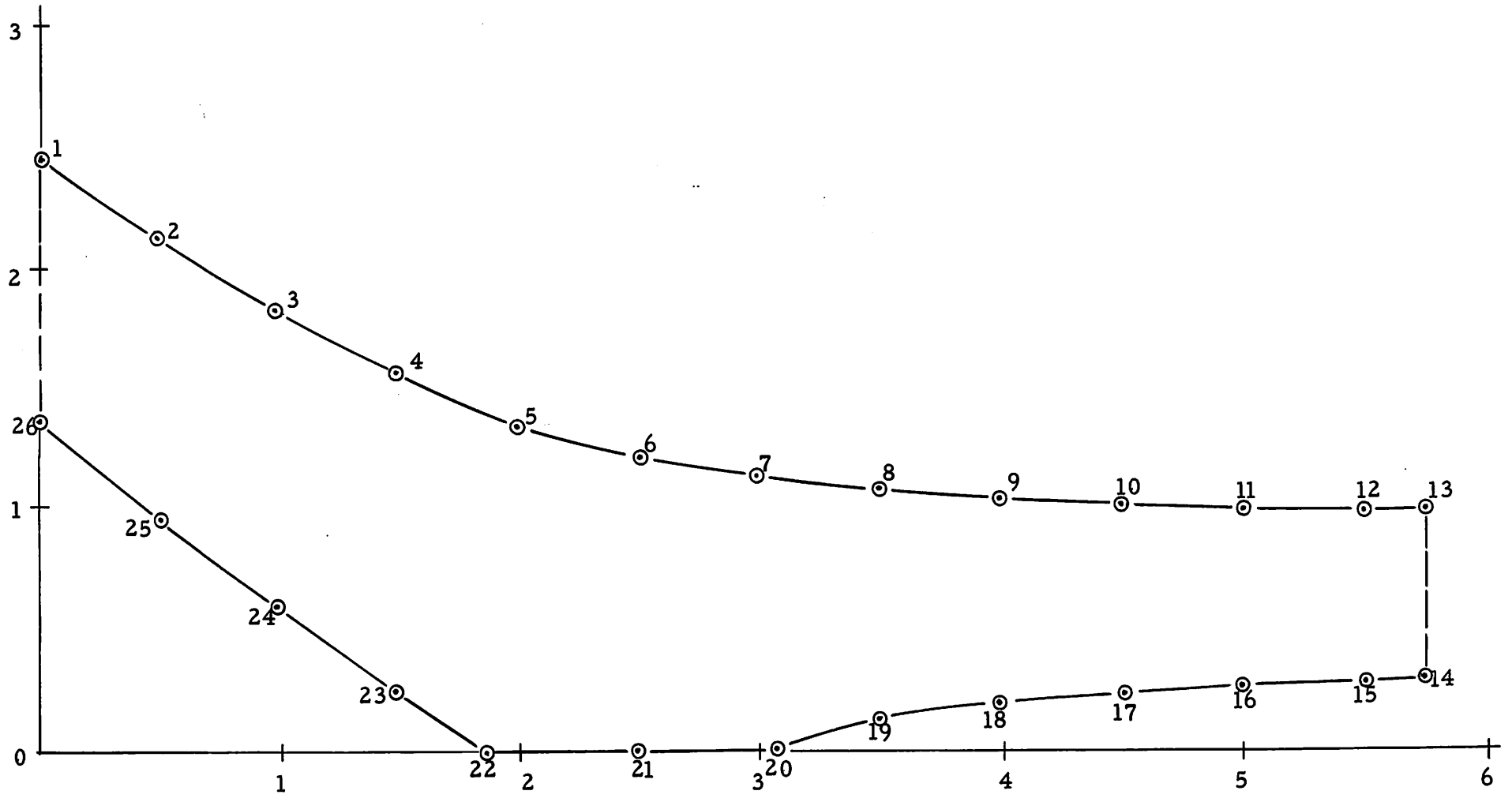
3
2
1
0
1
2
3
4
5
6
1
2
3
4
5
6
7
8
9
10
11
12
13
14
15
16
17
18
19
20
21
22
23
24
25
26

Fig. 4-1

For example, in Fig. 4-1 the cathode length $L_2$ is 1.2 units in an arbitrary scale. But in using the scaling relation $L_2$ should be taken as 1.2 meters and the corresponding magnetic field be used in the program. Using the scaling relation (1) the normalized magnetic field is given by $B_2 = 3.83 \times 10^{-6}$ webers/(met)$^2$. The actual perveance density $p_I$ has been estimated by Rao to be $4.88 \times 10^{-2}$ amps/(met)$^2$. Therefore the perveance density is[†]

$$P_2 = 4.88 \times 10^{-2} \times \left(\frac{.00762}{1.2}\right)^2 \text{ mks units}$$

$$= 1.97 \times 10^{-6} \text{ mks units.}$$

Hence a reasonable guess for the perveance density is $5 \times 10^{-6}$ pervs/m$^2$.

Table 4-1

INPUT DATA CARDS

| CARD | | DATA |
|---|---|---|
| 1 | * | JOB 858, TIME 15, PAGES 200, NAME OWENS, TRAJECTORY PR |
| 2 | * | NOTE AT PAUSE 1 MOUNT FOLLOWING TAPES. |
| 3 | * | TAPE 4, (PRIVATE TAPE)— CERN TRAJECTORY PROGRAM TAPE, READ. |
| 4 | * | TAPE 6, REEL 684, WRITE. |
| 5 | * | NOTE AT PAUSE 2 PUSH START. |
| 6 | * | NOTE AT PAUSE 3 DISMOUNT A4 and B5. |
| 7 | * | NOTE PRINT B5. |
| 8 | * | NOTE IF JOB RUNS OVERTIME OR STOPS (OTHER THAN PAUSE 1, 2 or 3) |

[†]See addendum to Ref. 1.

Table 4-1 (cont.)

INPUT DATA CARDS

| CARD | DATA | | | | | | |
|---|---|---|---|---|---|---|---|
| 9 | * | NOTE FOLLOW PROCEDURE ABOVE FOR PAUSE3 BEFORE STARTING NEXT JOB | | | | | |
| 10 | * | CHAIN (5, B3) | | | | | |
| 11 | | BINARY PROGRAM: CARD 1 | | | | | |
| 12 | | BINARY PROGRAM: CARD 2 | | | | | |
| 13 | | BINARY PROGRAM: CARD 3 | | | | | |
| 14 | * | DATA | | | | | |
| 15 | | 0.1 | 0.1 | | 1 | 114 | |
| 16 | | | | | 200 | 10 | 3 |
| 17 | | | | | 26 | | |
| 18 | | | 2.45 | 1.00 | | | |
| 19 | | 0.50 | 2.15 | 1.00 | | | |
| 20 | | 1.00 | 1.83 | 1.00 | | | |
| 21 | | 1.50 | 1.57 | 1.00 | | | |
| 22 | | 2.00 | 1.35 | 1.00 | | | |
| 23 | | 2.50 | 1.22 | 1.00 | | | |
| 24 | | 3.00 | 1.15 | 1.00 | | | |
| 25 | | 3.50 | 1.07 | 1.00 | | | |
| 26 | | 4.00 | 1.05 | 1.00 | | | |
| 27 | | 4.50 | 1.03 | 1.00 | | | |
| 28 | | 5.00 | 1.00 | 1.00 | | | |
| 29 | | 5.50 | 1.00 | 1.00 | | | |
| 30 | | 5.75 | 0.99 | 1.00 | | | |
| 31 | | 5.75 | 0.30 | | | | |
| 32 | | 5.50 | 0.30 | | | | |
| 33 | | 5.00 | 0.27 | | | | |

Table 4-1 (cont.)

INPUT DATA CARDS

| CARD | DATA | | | | | | |
|---|---|---|---|---|---|---|---|
| 34 | 4.50 | | 0.25 | | | | |
| 35 | 4.00 | | 0.20 | | | | |
| 36 | 3.50 | | 0.13 | | | | |
| 37 | 3.03 | | | | | | |
| 38 | 2.50 | | | | | | |
| 39 | 1.85 | | | | | | |
| 40 | 1.50 | | 0.25 | | | | |
| 41 | 1.00 | | 0.54 | | | | |
| 42 | .50 | | 0.95 | | | | |
| 43 | | | 1.35 | | | | |
| 44 | | | 5.0 | | | | |
| 45 | 5.0 | E-6 | 10.0 | 3.83 E-6 | 10 | 20 | 22 |
| 46 | 0.3 | | 0.3 | 1.0 | | 3 | |
| 47 | 0.0 | | 0.2 | 0.4 | 6 | 100 | 100 |
| 48 | 0.6 | | 0.8 | 1.0 | | | |

The first 13 cards are a normal start deck. The data deck will be described below (see Table 4-1).

| CARD | COMMENT |
|---|---|
| 15 | $\Delta x$ $\Delta y$ = 0.1 number of closed curves = 1 job number = 114 |
| 16 | Type of job = 200 (planar) sense switches 1, 0 time remaining before termination = three min |
| 17 | Number of boundary points = 26 |
| 18-43 | Boundary points |

Table 4-1 (cont.)

INPUT DATA CARDS

| CARD | DATA |
|---|---|
| 44 | 5.0 = accuracy criterion. |
| 45 | PGES = $5.0 \times 10^{-6}$ |
| | Perveance density |
| | $\lambda = 10.0$ |
| | Magnetic field = $3.83 \times 10^{-6}$ |
| | NRAY = 10 = number of rays to be traced |
| | NFC, NLC = 20; 22 start and finish of cathode. |
| 46 | SPRNT 20.3 = Distance between trajectory points |
| | $\tau = 0.3$ = integration distance |
| | MC = 1.0 = print graph |
| | MPS = 0 print out everything |
| | M1 = 3 print out every third trajectory. |
| 47 | Equipotentials at 0.0, 0.2, 0.4 volts, 6 total equipotentials, graph = 100 x 100. |
| 48 | Equipotentials at 0.6, 0.8, 1.0. |

The graphical output is shown in Fig. 4-2.

Example 5: In this example a Charles gun, designed by N. R. Mantena on the basis of single electron trajectory calculations, is described. A sketch of the gun tilted by an arbitrary angle is shown in Fig. 5-1. As can be seen, this is a straight electrode gun and the program restrictions described in Ref. 1 require that the gun be tilted such that no electrodes are parallel to the axes.

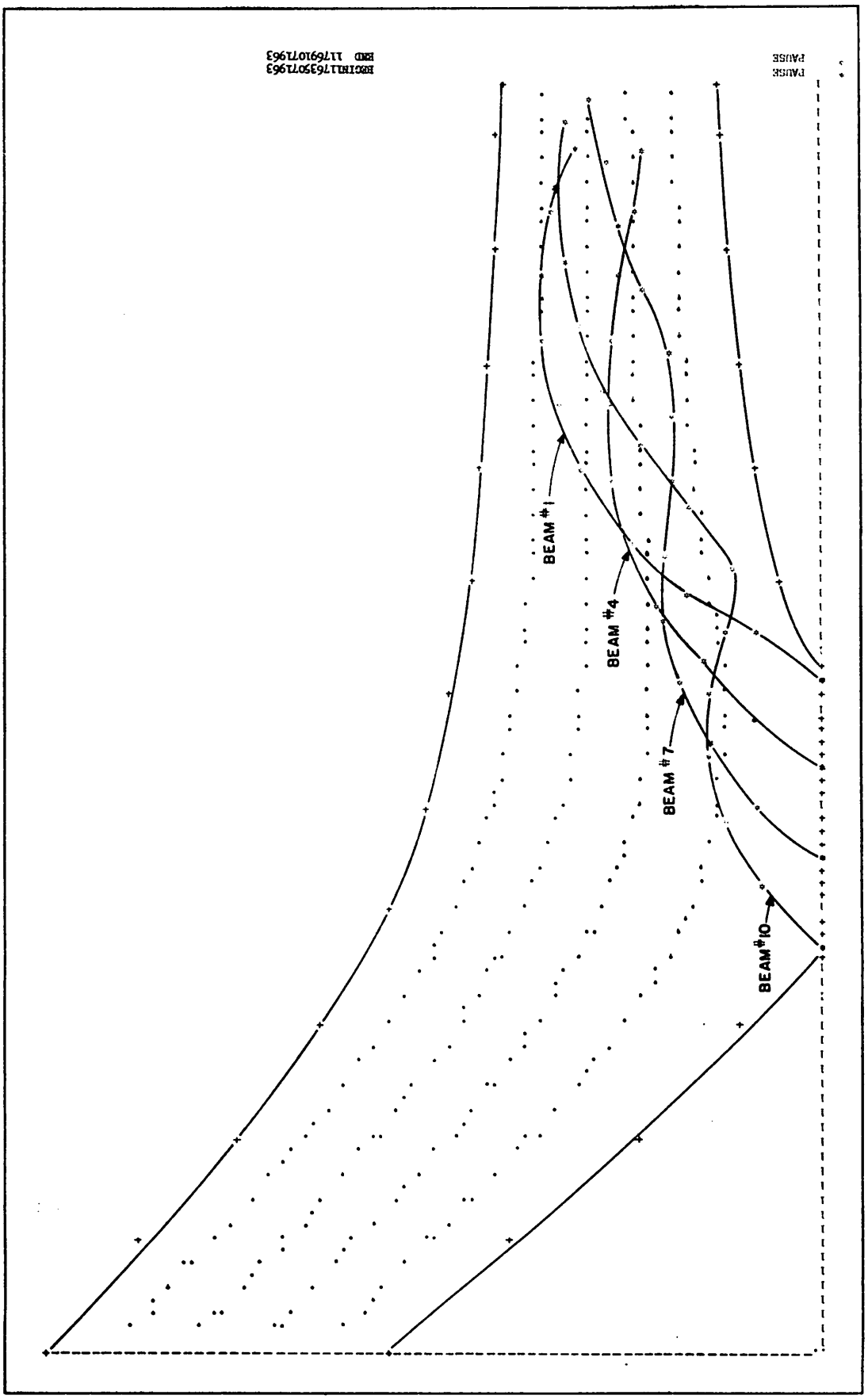


Fig. 4-2

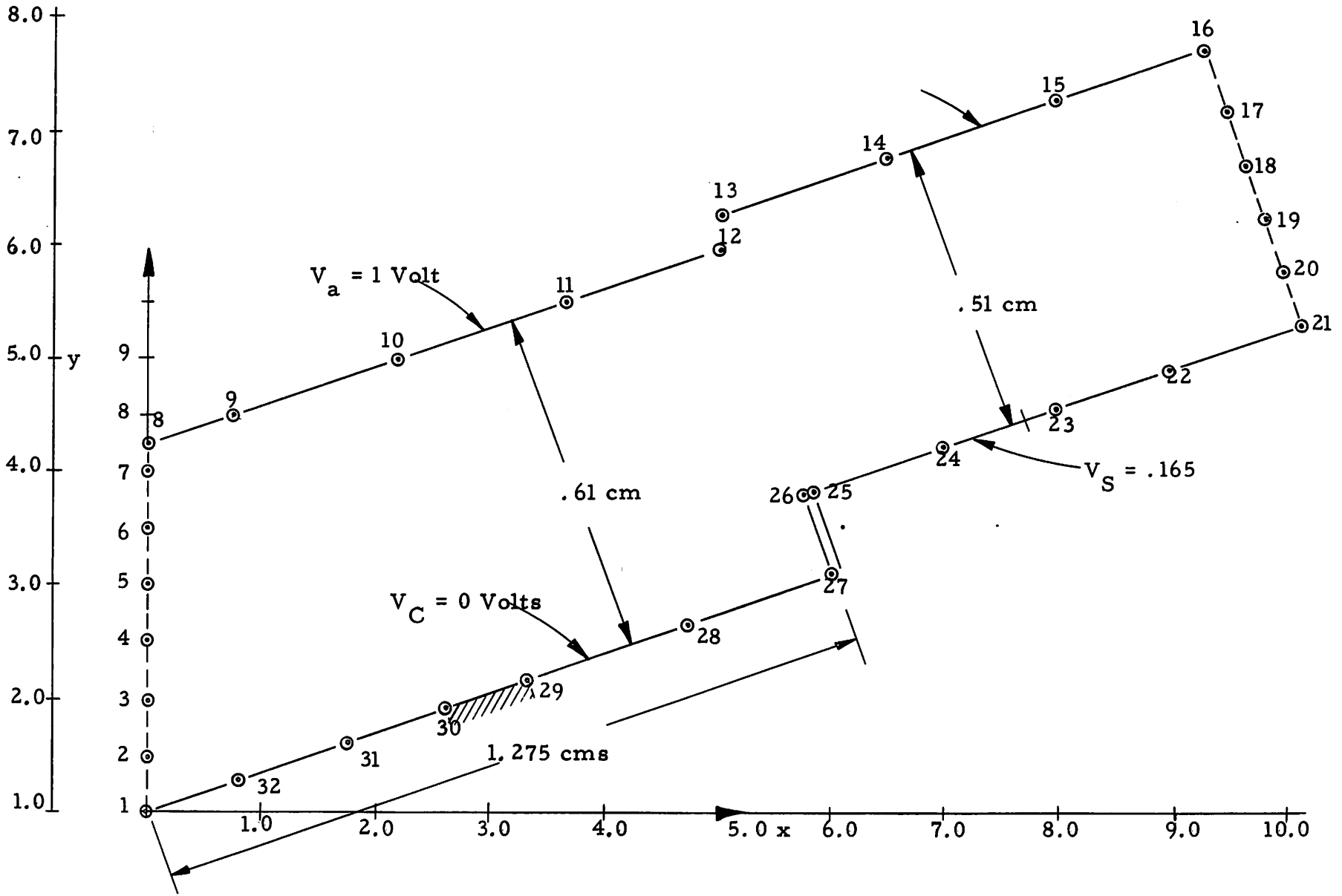
8.0
7.0
6.0
5.0
4.0
3.0
2.0
1.0
y
1.0
2.0
3.0
4.0
5.0 x
6.0
7.0
8.0
9.0
10.0
$V_a$ = 1 Volt
$V_C$ = 0 Volts
$V_S$ = .165
.51 cm
.61 cm
1.275 cms
1
2
3
4
5
6
7
8
9
10
11
12
13
14
15
16
17
18
19
20
21
22
23
24
25
26
27
28
29
30
31
32

Fig. 5-1

## Normalization of Magnetic Field and Perveance Density

These normalizations are similar to those in Example 3. We will only give the normalization relations here. These are

$$\frac{V_1}{B_1^2 \omega_1^2} = \frac{V_2}{B_2^2 \omega_2^2} \tag{1}$$

$$P_1 = P_2 \left(\frac{\omega_2}{\omega_1}\right) \tag{2}$$

where $V_1$, $B_1$, $\omega_1$, $P_1$ and $V_2$, $B_2$, $\omega_2$, $P_2$ are respectively the anode voltage, magnetic-field, cathode width, perveance density for the actual gun and its computer model.

For our gun,

$V_1 = 400V$, $B_1 = 135.5$ gauss
$= 1.355 \times 10^{-2}$ weber.

$\omega_1 = 0.15$ cm $= 0.15 \times 10^{-2}$ met.

$V_2 = 1.0$ volt; $\omega_2 = 0.75$ met.

$$\frac{\omega_2}{\omega_1} = \frac{0.75}{0.15 \times 10^{-2}} = 500.$$

Using Eq. (1),

$B_2 = 1.355 \times 10^{-6}$ weber.

$$P_1 = \left(\frac{\omega_2}{\omega_1}\right)^2 P_2 \text{ from (6);}$$

$$\therefore P_{guess} = P_{2\,guess} = P_{1\,guess} \cdot (\omega_1 / \omega_2)^2.$$

The input cards are shown in Table 5-1.

Table 5-1

INPUT DATA CARDS

| CARD | DATA |
|---|---|
| 1 | * JOB 1146, TIME 10, PAGES 200, NAME MANTENA. JOB 2, 9TH SEPT. 1963. |
| 2 | * RETURN OF TAPE 4 ALONG WITH THE OUTPUT IS REQUESTED. |
| 3 | * NOTE AT PAUSE1 MOUNT FOLLOWING TAPES. |
| 4 | * TAPE 4, (PRIVATE TAPE)—CERN TRAJECTORY PROGRAM TAPE, READ. |
| 5 | * NOTE THIS TAPE IS SUPPLIED WITH THE INPUT DECK |
| 6 | * TAPE 4, READ. |
| 7 | * TAPE 6, REEL 684, WRITE. |
| 8 | * NOTE AT PAUSE2 PUSH START. |
| 9 | * NOTE AT PAUSE3 DISMOUNT A4 and B5. |
| 10 | * NOTE PRINT B5. |
| 11 | * NOTE IF JOB RUNS OVERTIME OR STOPS (OTHER THAN PAUSE1, PAUSE2 OR PAUSE3) |
| 12 | * NOTE FOLLOW PROCEDURE ABOVE FOR PAUSE3 BEFORE STARTING NEXT JOB. |
| 13 | * CHAIN(5, B3) |
| 14 | BINARY PROGRAM: CARD 1 |
| 15 | BINARY PROGRAM: CARD 2 |
| 16 | BINARY PROGRAM: CARD 3 |
| 17 | * DATA |
| 18 | * 0.2 0.2 1 116 |
| 19 | 200 10 3.0 |
| 20 | 32 |

Table 5-1 (cont.)

INPUT DATA CARDS

| CARD | DATA | | |
|---|---|---|---|
| 21 | 0.00 | | |
| 22 | 0.00 | 0.5 | .1475 |
| 23 | 0.00 | 1.0 | .295 |
| 24 | 0.00 | 1.5 | .469 |
| 25 | 0.00 | 2.0 | .613 |
| 26 | 0.00 | 2.5 | .771 |
| 27 | 0.00 | 3.0 | .918 |
| 28 | 0.00 | 3.25 | 1.00 |
| 29 | 0.75 | 3.50 | 1.00 |
| 30 | 2.20 | 4.00 | 1.00 |
| 31 | 3.70 | 4.50 | 1.00 |
| 32 | 5.05 | 4.95 | 1.00 |
| 33 | 5.05 | 5.25 | 1.50 |
| 34 | 6.50 | 5.75 | 1.50 |
| 35 | 8.00 | 6.25 | 1.50 |
| 36 | 9.33 | 6.70 | 1.50 |
| 37 | 9.50 | 6.15 | 1.243 |
| 38 | 9.67 | 5.70 | .816 |
| 39 | 9.85 | 5.20 | .489 |
| 40 | 10.00 | 4.75 | .162 |
| 41 | 10.15 | 4.25 | -.165 |
| 42 | 9.00 | 3.88 | -.165 |
| 43 | 8.00 | 3.55 | -.165 |
| 44 | 7.00 | 3.20 | -.165 |
| 45 | 5.85 | 2.80 | -.165 |

Table 5-1 (cont.)

INPUT DATA CARDS

| CARD | DATA | | | | | | |
|---|---|---|---|---|---|---|---|
| 46 | 5.78 | 2.78 | 0.00 | | | | |
| 47 | 6.03 | 2.10 | 0.00 | | | | |
| 48 | 4.75 | 1.65 | 0.00 | | | | |
| 49 | 3.35 | 1.15 | 0.00 | | | | |
| 50 | 2.63 | .91 | 0.00 | | | | |
| 51 | 1.75 | .60 | 0.00 | | | | |
| 52 | 0.80 | .30 | 0.00 | | | | |
| 53 | | 1.0 | | | | | |
| 54 | 2.73 -7 | 10.0 | 1.355 | -6 | 10 | 29 | 30 |
| 55 | 0.3 | 0.3 | 1.0 | | | 3 | |
| 56 | 0.0 | 0.2 | 0.4 | | 6 | 100 | 100 |
| 57 | 0.6 | 0.8 | 1.0 | | | | |

The final value of $P_2$ as obtained from the computer printout is $2.73 \times 10^{-7}$,

$$\therefore \quad P_1 = (500)^2 \times 2.73 \times 10^{-7}$$

$$= .25 \times 2.73 \times 10^{-1}$$

$$P_1 = \frac{I_1}{V_1^{3/2} \cdot \ell, \omega} = 2.5 \times 2.73 \times 10^{-2} .$$

For $V_1 = 400V$, $\omega_1 = .15 \times 10^{-2}$ met.

$\ell_1 = 4 \times 10^{-2}$ met.

$$\therefore \quad I_1 = 2.5 \times 2.73 \times 10^{-2} \times (400 \times 20)$$

$$\times .15 \times 10^{-2} \times 4 \times 10^{-2}$$

$$= 2.73 \times 1.5 \times 8 \times 10^{-3} \text{ amps}$$

$$I_1 = 32.7 \text{ ma.}$$

The predicted cathode current for these operating conditions is 31 ma which is very close to the computed value.

The trajectories printed out (see Fig. 5-2) by the computer almost exactly correspond to the designed trajectories. The whole program took only five minutes. It might be noted that there is no convergence in the beam width at all.

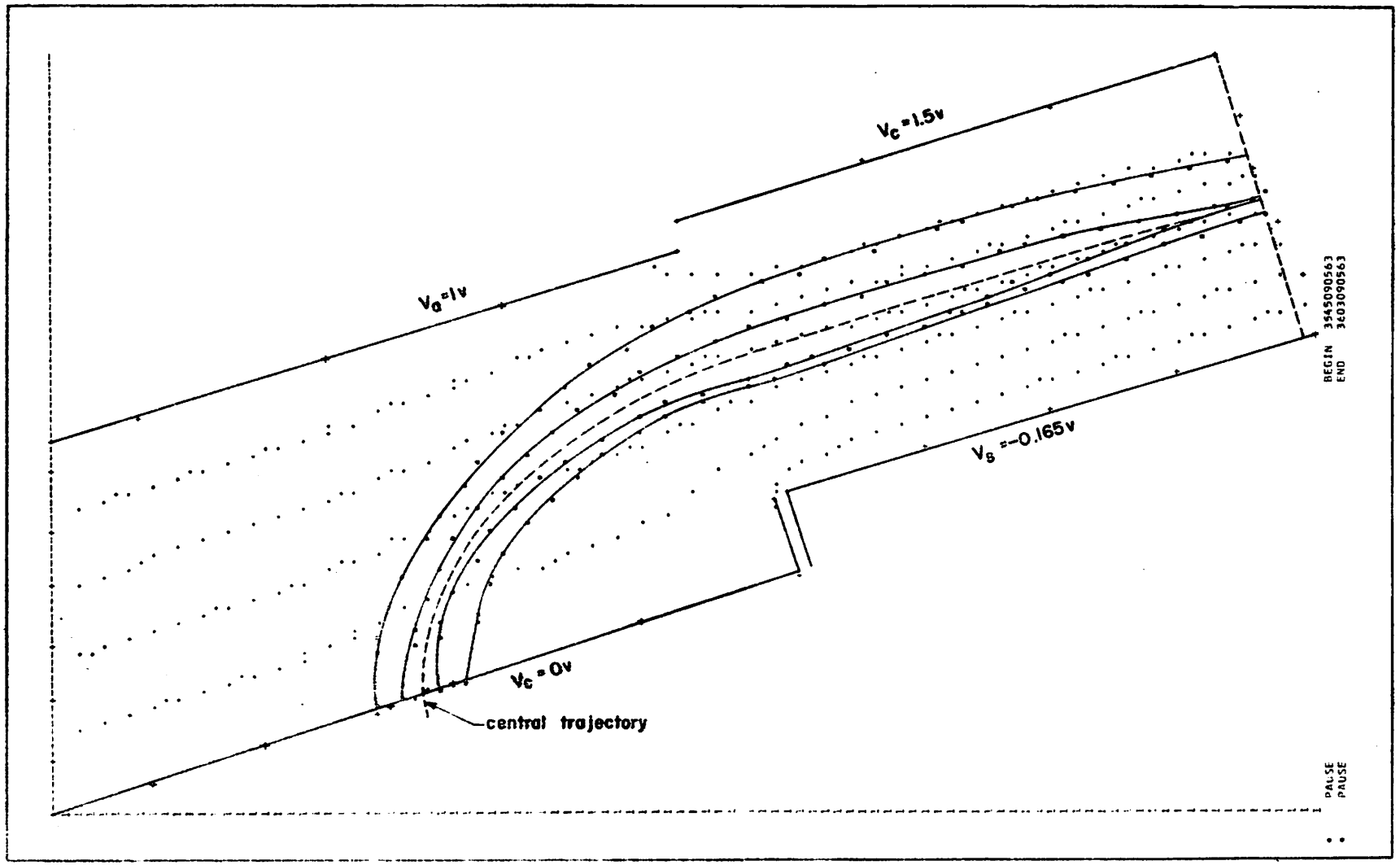
$V_c$=1.5v
$V_a$=1v
$V_s$=-0.165v
$V_c$=0v
central trajectory
BEGIN 3945090563
END 3603090563
PAUSE
PAUSE

Fig. 5-2