# N-DIMENSIONAL CANONICAL CHUA'S CIRCUITS

by

Lj. Kocarev, Lj. Karadzinov, and L. O. Chua

Memorandum No. UCB/ERL M92/73

15 April 1992

COVER PAGE

# N-DIMENSIONAL CANONICAL CHUA'S CIRCUITS

by

Lj. Kocarev, Lj. Karadzinov, and L. O. Chua

Memorandum No. UCB/ERL M92/73

15 April 1992

**ELECTRONICS RESEARCH LABORATORY**

College of Engineering
University of California, Berkeley
94720

TITLE PAGE

# N-DIMENSIONAL CANONICAL CHUA'S CIRCUITS

by

Lj. Kocarev, Lj. Karadzinov, and L. O. Chua

Memorandum No. UCB/ERL M92/73

15 April 1992

**ELECTRONICS RESEARCH LABORATORY**

College of Engineering
University of California, Berkeley
94720

# N - DIMENSIONAL CANONICAL CHUA'S CIRCUIT

**LJ. KOCAREV***

Department of Electrical Engineering and Computer Sciences, University of California, Berkeley, CA 94720

**LJ. KARADZINOV**

Faculty of Electrical Engineering, Cyril and Methodius University, 91000 Skopje, PO Box 574, Macedonia

**L.O.CHUA**

Department of Electrical Engineering and Computer Sciences, University of California, Berkeley, CA 94720

* On leave from Faculty of Electrical Engineering, Cyril and Methodius University, 91000 Skopje, PO Box 574, Macedonia

This work is supported in part by the Office of Naval Research under grant N00014-89-J-1402 and the National Science Foundation under grant MIP-8912639

ABSTRACT - In this paper we present an n-dimensional canonical piecewise-linear electrical circuit. It contains 2n two-terminal elements: n linear dynamic elements (capacitors and inductors), n-1 linear resistors and one nonlinear (piecewise-linear) resistor. This circuit can realize any prescribed eigenvalue pattern, except for a set of measure zero, associated with (i) any n-dimensional two-region continuous piecewise-linear vector fields and (ii) any n-dimensional three-region symmetric (with respect to the origin) piecewise-linear continuous vector fields. We also proved a theorem that specifies the conditions for a vector field, realized with our canonical circuit, to have two or three equilibrium points.

# I. INTRODUCTION

Extensive investigation of low-dimensional nonlinear systems has yielded great improvements in the understanding of its evolution, resulting in an enormous number of experimental and theoretical works. Among low-dimensional nonlinear systems, piecewise linear systems are of particular importance. A class of these systems; namely, the class of three-dimensional three-region symmetric (with respect to the origin) piecewise-linear continuous vector fields, has been extensively investigated by L.Chua and his co-workers[1,2]. Recently, a piecewise-linear circuit has been presented[3], such that it contains the minimum number of elements needed to generate all possible phenomena in any three-dimensional three-region symmetric (with respect to the origin) piecewise- linear continuous vector fields. In the above sense, this circuit is called canonical[3].

However, many nonlinear dynamical systems are intrinsically high-dimensional. Fluid flows, chemical reactions and electrical circuits with distributed parameters have many spatially-distributed degrees of freedom. The behavior of these systems cannot be understood (except in limited contexts) in terms of low-dimensional dynamics. In order to understand better the temporal and spatial evolution of high-dimensional nonlinear systems, it is highly desirable to derive an n-dimensional canonical circuit, as a paradigm for high - dimensional chaos.

In this paper, we will present an n-dimensional piecewise- linear electrical circuit, which is canonical[3] in the following sense : (i) it can realize any eigenvalue pattern (except for a set of measure zero) associated with any n-dimensional two-region continuous piecewise-linear vector fields, or any n-dimensional three-region symmetric (with respect to

the origin) piecewise-linear continuous vector fields; (ii) it contains the minimum number of elements (this number is 2n) needed for such a circuit. In Section II we give the structure of our circuit. It is a generalization of the canonical circuit presented in Ref.3 and contains 2n two-terminal elements: n linear dynamic elements (capacitors and inductors), n-1 linear resistors and one piecewise-linear 2-terminal resistor. In Section III we prove that our circuit is canonical and develop an efficient algorithm for calculating the circuit parameters from an arbitrarily given set of eigenvalues, except for a set with zero Lebesgue measure. Further, in Section IV we prove a theorem that specifies the conditions for our canonical circuit to have two or three dc operating points. We close the paper with Section IV where we give conclusions and pose some question for further studies.

## II. CANONICAL CHUA'S CIRCUIT

Consider the class $\mathbb{L}(n,k)$ of n-dimensional k-region continuous piecewise-linear vector fields. We define a k-segment Chua's diode[4] as a nonlinear resistor with a piecewise-linear v-i characteristic:

$$i = a_0 + a_1 v + \sum_{j=1}^{k-1} b_j \, |v - E_j|$$

($a_0$, $a_1$, $b_1$, ...., $b_{k-1}$, $E_1$, ...., $E_{k-1}$ are arbitrary real numbers). Note that every circuit which contains n linear dynamic elements (capacitors and inductors, possibly mutually coupled), one k-segment Chua's diode and an arbitrary number of linear resistors is a member of $\mathbb{L}(n,k)$. Let us define $\mathbb{C}(n,k)$ to be the subclass of $\mathbb{L}(n,k)$ such that, the v-i characteristic of Chua's diode is symmetric with respect to the origin. The three-dimensional canonical Chua's circuit[3] is a member of $\mathbb{C}(3,3)$. Moreover, it follows from Ref.

5 and 6 that one can derive all possible nonlinear dynamics phenomena in $\mathbb{C}(3,3)$ by analyzing this circuit alone.

In this paper we shall restrict ourselves on $\mathbb{L}(n,2)$ and $\mathbb{C}(n,3)$ and prove that there exist a circuit, such that all circuit parameters can be determined uniquely and which possesses any (except a set of measure zero) prescribed eigenvalue pattern associated with $\mathbb{L}(n,2)$ and $\mathbb{C}(n,3)$.

First of all, we calculate the minimum number of elements needed for such a circuit. Since our goal is an n-dimensional circuit described by n first-order differential equations, it must have n dynamic elements (capacitors and/or inductors). Since we consider the vector fields in $\mathbb{L}(n,2)$ and $\mathbb{C}(n,3)$, the circuit is allowed to have only one Chua's diode whose v-i characteristic is two-segment piecewise-linear (see Fig.1(a)), or three-segment piecewise-linear and symmetric with respect to the origin (see Fig.1(b)). Define the regions $D_0$ and $D_1$ by $v_{C_1} < 1$ and $v_{C_1} > 1$ for the v-i characteristic shown in Fig.1(a), and, $D_{-1}$, $D_0$ and $D_{+1}$ by $v_{C_1} < -1$, $|v_{C_1}| < 1$ and $v_{C_1} > 1$ for the v-i characteristic shown in Fig.1(b). The state equations of the circuit in each of these regions are affine. Since, for the vector fields in $\mathbb{C}(n,3)$, the eigenvalues in the regions $D_{-1}$ and $D_{+1}$ are identical, in view of symmetry, the total number of eigenvalues characterizing each circuit is 2n.

Impulsively, one might rush to conclude that 2n parameters are enough. However, because of the well-known impedance scaling[3] property of linear systems this is not correct. Indeed, an autonomous linear 2-element RC circuit has two circuit parameters R and C, but has only one natural frequency 1/RC (or time constant RC). This frequency remains unchanged if the circuit parameters changed to $\alpha R$ and $C/\alpha$, where $\alpha$ is an *arbitrary* real number. In other words, to produce the natural frequency, one can assign an arbitrary value to one parameter, and find the value of the other parameter. The circuit having a single natural

frequency can be uniquely identified only by specifying also the the impedance level through the value of R.

This situation is similar for n-dimensional circuits. Since the left-hand sides of the following equations (6) and (7) are homogeneous functions of *the* zeroth order (the circuit parameters are the unknown variables) the circuit with 2n parameters ($G_i$, $R_j$, $L_k$, $C_l$) produces the same set of eigenvalues as the same circuit with 2n parameters ($\alpha G_i$, $R_j/\alpha$, $L_k/\alpha$, $\alpha C_l$). In other words, to generate 2n eigenvalues for $\mathbb{L}(n,2)$ or $\mathbb{C}(n,3)$ we need at least 2n+1 parameters: n of them determine the dynamic elements, two parameters determine the v-i characteristic of the nonlinear resistor, and the remaining n-1 parameters are linear resistors. Thus, the minimum number of circuit elements is 2n, characterized by 2n + 1 parameters.

Of course, while there exist more than one canonical circuit for $\mathbb{L}(n,2)$ and $\mathbb{C}(n,3)$, not every circuit containing 2n elements is canonical. Figure 2(a) shows a three-dimensional canonical circuit given by Chua and Lin[3]. Although there exist other three-dimensional canonical circuits (two new three-dimensional canonical Chua's circuit are presented by Lj.Kocarev et al.[7]), the state equations of the circuit in Fig.2(a) are the simplest: the matrix **B** in Eq.(4) is tridiagonal and its elements have the simplest possible form (in Ref.8 we find all other three dimensional canonical Chua's circuits and proved that the circuit from Ref.3 has the simplest state equations).

Having this in mind, we can easily extend the original and simplest canonical Chua's circuit to an n-dimensional circuit by simply adding alternatively L's (with serial R's) and C's (with parallel G's), as shown in Fig.2. Note that as $n \to \infty$, the canonical Chua's circuit is equivalent to connecting a lossy transmission line across Chua's diode.

In the region $D_0$, the state equations of the n-dimensional circuit from Fig.2.d are linear:

$$\begin{bmatrix} \frac{dv_{C_1}}{dt} \\ \frac{di_{L_2}}{dt} \\ \cdots \\ \frac{dv_{C_{n-1}}}{dt} \\ \frac{di_{L_n}}{dt} \end{bmatrix} = \begin{bmatrix} a_{1,1} & a_{1,2} & .. & a_{1,n} \\ a_{2,1} & a_{2,2} & ... & a_{2,n} \\ \cdots & \cdots & & \cdots \\ a_{n-1,1} & a_{n-1,2} & & a_{n-1,n} \\ a_{n,1} & a_{n,2} & .. & a_{n,n} \end{bmatrix} \cdot \begin{bmatrix} v_{C_1} \\ i_{L_2} \\ \cdots \\ v_{C_{n-1}} \\ i_{L_n} \end{bmatrix} \equiv M_0 \cdot X \tag{1}$$

where (assuming that the slope of the v-i characteristic in $D_0$ is equal to $G_a$) the matrix in the region $D_0$ is given by:

$$M_0 = \begin{bmatrix} -\frac{G_a}{C_1} & \frac{1}{C_1} & 0 & 0 & 0 & \cdots & 0 & 0 & 0 \\ -\frac{1}{L_2} & -\frac{R_2}{L_2} & \frac{1}{L_2} & 0 & 0 & \cdots & 0 & 0 & 0 \\ 0 & -\frac{1}{C_3} & -\frac{G_3}{C_3} & \frac{1}{C_3} & 0 & \cdots & 0 & 0 & 0 \\ \vdots & \vdots & \vdots & \vdots & & & \vdots & \vdots & \vdots \\ 0 & 0 & 0 & 0 & \cdots & 0 & -\frac{1}{C_{n-1}} & -\frac{G_{n-1}}{C_{n-1}} & \frac{1}{C_{n-1}} \\ 0 & 0 & 0 & 0 & \cdots & 0 & 0 & -\frac{1}{L_n} & \frac{R_n}{L_n} \end{bmatrix} \tag{2a}$$

for n even (Fig.2(d) with equal number of capacitors and inductors), and

$$
M_0 = \begin{bmatrix}
-\frac{G_a}{C_1} & \frac{1}{C_1} & 0 & 0 & 0 & \cdots & 0 & 0 & 0 \\
-\frac{1}{L_2} & -\frac{R_2}{L_2} & \frac{1}{L_2} & 0 & 0 & \cdots & 0 & 0 & 0 \\
0 & -\frac{1}{C_3} & -\frac{G_3}{C_3} & \frac{1}{C_3} & 0 & \cdots & 0 & 0 & 0 \\
\vdots & \vdots & \vdots & & & & \vdots & \vdots & \vdots \\
0 & 0 & 0 & 0 & \cdot\cdot & 0 & -\frac{1}{L_{n-1}} & -\frac{R_{n-1}}{L_{n-1}} & \frac{1}{L_{n-1}} \\
0 & 0 & 0 & 0 & \cdot\cdot & 0 & 0 & -\frac{1}{C_n} & -\frac{G_n}{C_n}
\end{bmatrix} \tag{2b}
$$

for n odd (Fig.2(e) with one more capacitor than inductors).

*Remarks*:

1) The matrix $M_0$ in Eq.(2) has only 2n-1 different non-zero elements, since

$$a_{i,i-1} = -a_{i,i+1}, \; i = 2, \ldots, n-1.$$

2) The matrix of the canonical Chua's circuit is a submatrix of Eq.(2): the first three rows and columns.

3) If we increase the dimension of the circuit by one, the corresponding matrix will have only two new elements: $a_{n+1,n}$ and $a_{n+1,n+1}$ (since, $a_{n,n-1} = = -a_{n,n+1}$).

Similarly, in the regions $D_1$ and $D_{\pm 1}$, where the state equations are affine, the corresponding matrix $M_1$ will have the same elements as $M_0$, except for $a_{1,1}$, where the slope of the v-i characteristic must be changed to $G_b$. We shall denote it by $\bar{a}_{1,1}$:

$$\bar{a}_{1,1} = - G_b/C_1. \tag{3}$$

Observe that the n-dimensional canonical Chua's circuit is characterized by a canonical piecewise-linear state equation[9]:

$$\dot{\mathbf{X}} = \mathbf{A} + \mathbf{B}\,\mathbf{X} + \sum_{i=1}^{2} \mathbf{C}_i \left| \langle \alpha_i, \mathbf{X} \rangle - \beta_i \right| \tag{4}$$

where

$$\mathbf{A} = \begin{bmatrix} 0 \\ 0 \\ \vdots \\ 0 \end{bmatrix}_{n\times 1}, \quad \mathbf{B} = M_1, \quad \mathbf{C}_1 = \begin{bmatrix} -(G_a - G_b)/2C_1 \\ 0 \\ \vdots \\ 0 \end{bmatrix}_{n\times 1}, \quad \mathbf{C}_2 = -\,\mathbf{C}_1$$

$$\alpha_1 = \alpha_2 = \begin{bmatrix} 1 \\ 0 \\ \vdots \\ 0 \end{bmatrix}_{n\times 1}, \qquad \beta_1 = -1, \qquad \beta_2 = 1$$

and < , > denotes a vector dot product.

Denote by $\mu_1, \mu_2, \ldots, \mu_n$ and $\nu_1, \nu_2, \ldots, \nu_n$ the eigenvalues of the matrices $M_0$ and $M_1$, respectively. Some of the $\mu$'s and $\nu$'s may be complex conjugate numbers. In order to avoid complex numbers, we can define:

$$
\begin{aligned}
p_1 &= \sum_{i=1}^{n} \mu_i & q_1 &= \sum_{i=1}^{n} \nu_i \\
-p_2 &= \sum_{\substack{i=1,\dots,n-1 \\ j=i+1,\dots,n}} \mu_i\mu_j & -q_2 &= \sum_{\substack{i=1,\dots,n-1 \\ j=i+1,\dots,n}} \nu_i\nu_j \\
p_3 &= \sum_{\substack{i=1,\dots,n-2 \\ j=i+1,\dots,n-1 \\ k=j+1,\dots,n}} \mu_i\mu_j\mu_k & q_3 &= \sum_{\substack{i=1,\dots,n-2 \\ j=i+1,\dots,n-1 \\ k=j+1,\dots,n}} \nu_i\nu_j\nu_k \\
&\dots & &\dots \\
(-1)^{n-1}p_n &= \mu_1\mu_2\mu_3 \dots \mu_n & (-1)^{n-1}q_n &= \nu_1\nu_2\nu_3 \dots \nu
\end{aligned}
\tag{5}
$$

The characteristic polynomial of the matrix $M_0$ is:

$$
\begin{aligned}
&(s-\mu_1)(s-\mu_2)\cdots(s-\mu_n) = \\
&= s^n - p_1 s^{n-1} - p_2 s^{n-2} - \dots - p_{n-1}s - p_n = 0
\end{aligned}
$$

where $(-1)^{n-k-1}p_{n-k}$ is a sum of all (n-k)-th order main subdeterminants of the matrix $M_0$:

$$
p_1 = \sum_{s_1=1}^{n} a_{s_1,s_1} \tag{6a}
$$

$$
-p_2 = \sum_{s_1=1}^{n-1} \sum_{s_2>s_1}^{n} \begin{vmatrix} a_{s_1,s_1} & a_{s_1,s_2} \\ a_{s_2,s_1} & a_{s_2,s_2} \end{vmatrix} \tag{6b}
$$

$$
(-1)^{m-1}p_m = \sum_{s_1=1}^{n-m+1} \sum_{s_2>s_1}^{n-m+2} \dots \sum_{s_m>s_{m-1}}^{n} \begin{vmatrix} a_{s_1,s_1} & \cdots & a_{s_1,s_m} \\ a_{s_2,s_1} & \cdots & a_{s_2,s_m} \\ \vdots & \ddots & \vdots \\ a_{s_m,s_1} & \cdots & a_{s_m,s_m} \end{vmatrix} \tag{6c}
$$

$$(-1)^{n-1}p_n = \begin{vmatrix} a_{1,1} & a_{1,2} & \cdots & a_{1,n} \\ a_{2,1} & a_{2,2} & \cdots & a_{2,n} \\ \vdots & \vdots & \ddots & \vdots \\ a_{n,1} & a_{n,2} & \cdots & a_{n,n} \end{vmatrix} \tag{6d}$$

where $a_{i,j}$ are the elements of $M_0$.

In a similar fashion for the matrix $M_1$ we have:

$$q_1 = \sum_{s_1=1}^{n} \bar{a}_{s_1,s_1} \tag{7a}$$

$$-q_2 = \sum_{s_1=1}^{n-1} \sum_{s_2>s_1}^{n} \begin{vmatrix} \bar{a}_{s_1,s_1} & a_{s_1,s_2} \\ a_{s_2,s_1} & a_{s_2,s_2} \end{vmatrix} \tag{7b}$$

$$(-1)^{m-1}q_m = \sum_{s_1=1}^{n-m+1} \sum_{s_2>s_1}^{n-m+2} \cdots \sum_{s_m>s_{m-1}}^{n} \begin{vmatrix} \bar{a}_{s_1,s_1} & \cdots & a_{s_1,s_m} \\ a_{s_2,s_1} & \cdots & a_{s_2,s_m} \\ \vdots & \ddots & \vdots \\ a_{s_m,s_1} & \cdots & a_{s_m,s_m} \end{vmatrix} \tag{7c}$$

$$(-1)^{n-1}q_n = \begin{vmatrix} \bar{a}_{1,1} & a_{1,2} & \cdots & a_{1,n} \\ a_{2,1} & a_{2,2} & \cdots & a_{2,n} \\ \vdots & \vdots & \ddots & \vdots \\ a_{n,1} & a_{n,2} & \cdots & a_{n,n} \end{vmatrix} \tag{7d}$$

where $\bar{a}_{i,i} = a_{i,i}$ ($i = 2, \ldots, n$), and $\bar{a}_{1,1}$ is given by Eq.(3).

## III. PROVING THE CIRCUIT IS CANONICAL

In this section we will prove that the n-dimensional circuit shown in Fig.2(d) and 2(e) is canonical.

### THEOREM 1. :

The circuit from Fig.2(d) (or Fig.2(e)) is canonical; that is it contains the minimum number of elements (this number is 2n) needed to realize any eigenvalue pattern associated with $\mathbb{L}(n,2)$ and $\mathbb{C}(n,3)$, except for a set with zero Lebesque measure.

We shall prove now the following three lemmas.

Lemma 1:

Let us define:

$$A_{m,l} = \sum_{s_1=l}^{n-m+1} \sum_{s_2>s_1}^{n-m+2} \cdots \sum_{s_m>s_{m-1}}^{n} \begin{vmatrix} a_{s_1,s_1} & a_{s_1,s_2} & \cdots & a_{s_1,s_m} \\ a_{s_2,s_1} & a_{s_2,s_2} & \cdots & a_{s_2,s_m} \\ \vdots & \vdots & \ddots & \vdots \\ a_{s_m,s_1} & a_{s_m,s_2} & \cdots & a_{s_m,s_m} \end{vmatrix}$$

($l$ = 1, 2, ...,n; m = 1, 2,..., n-$l$+1), where $a_{i,j}$ are the elements of $M_0$.

Then:

(i) $A_{m,1} = (-1)^{m-1} p_m$ $\qquad$ m = 1, ..., n

(ii) $A_{m,2} = (-1)^m \dfrac{p_{m+1} - q_{m+1}}{p_1 - q_1}$ $\qquad$ m = 1, ..., n-1

*Proof.* See Appendix A.

Lemma 2:

The numbers $A_{m,l}$, defined in Lemma 1 satisfy the following recurrent relations:

$$A_{1,l} = A_{1,l+1} + \alpha_l, \quad l = 1, \ldots, n-1 \tag{8a}$$

$$A_{1,n} = \alpha_n \tag{8b}$$

$$A_{2,l} = A_{2,l+1} + \alpha_l A_{1,l+1} - \beta_l, \quad l = 1, \ldots, n-2 \tag{9a}$$

$$A_{2,n-1} = \alpha_{n-1} A_{1,n} - \beta_{n-1} \tag{9b}$$

$$A_{m,l} = A_{m,l+1} + \alpha_l A_{m-1,l+1} - \beta_l A_{m-2,l+2} \quad m = 3, \ldots, n-1; \quad l = 1, \ldots, n-m \tag{10a}$$

$$A_{m,n-m+1} = \alpha_{n-m+1} A_{m-1,n-m+2} - \beta_{n-m+1} A_{m-2,n-m+3} \quad m = 3, \ldots, n \tag{10b}$$

where

$\alpha_l = a_{l,l}$ ($l$ = 1,2,..., n) and $\beta_l = a_{l,l+1} a_{l+1,l}$ ($l$ = 1,2,..., n-1).

*Proof.* See Appendix B.

Lemma 3:

Let $A_{m,l}$ (m = 1, 2, ...,n; $l$ = 1, 2, ... n-m+1), $\alpha_l$ ($l$ = 1, 2, ...n) and $\beta_l$ ($l$ = 1, 2, ...n-1) be real numbers that satisfy the relations (8-10). Then the numbers $\alpha_1, \ldots, \alpha_n$; $\beta_1, \ldots, \beta_{n-1}$ can be determined uniquely from the numbers $A_{1,1}, \ldots, A_{n,1}$; $A_{1,2}, \ldots, A_{n-1,2}$.

*Proof.* See Appendix C.

*Proof of Theorem 1.*

Let $\mu_1$, $\mu_2$ , ..., $\mu_n$ and $\nu_1$, $\nu_2$, ..., $\nu_n$ be the eigenvalues of the matrices $M_0$ and $M_1$, respectively. Using the relations (5) we can obtain the numbers $p_1$, $p_2$ , ..., $p_n$ and $q_1$, $q_2$, ..., $q_n$ . From Lemma 1, we find 2n-1 numbers $A_{1,1}$, ..., $A_{n,1}$; $A_{1,2}$, ...,$A_{n-1,2}$, while from Lemma 3, $\alpha_1$, ..., $\alpha_n$; $\beta_1$, ..., $\beta_{n-1}$. Since our circuit contains 2n+1 parameters (but only 2n in the $D_0$ region), we can assign an arbitrary value to any one of them. Taking, for example:

$$C_1 = a \text{ (a is an arbitrary value)}$$

and using the definition of $\alpha_l$ and $\beta_l$ in Lemma 2, we obtain:

$$G_a = -\alpha_1 C_1$$

$$L_2 = -1/(\beta_1 C_1)$$

$$R_2 = -\alpha_2 L_2$$

$$C_3 = -1/(\beta_2 L_2)$$

$$\dots$$

$$G_{2l-1} = -\alpha_{2l-1} C_{2l-1}$$

$$L_{2l} = -1/(\beta_{2l-1} C_{2l-1})$$

$$R_{2l} = -\alpha_{2l} L_{2l}$$

$$C_{2l+1} = -1/(\beta_{2l} L_{2l})$$

$$\dots$$

$$R_n = -\alpha_n L_n \text{ , for n even,}$$

and

$$G_n = -\alpha_n C_n \text{ , for n odd.}$$

Finally, the last (2n+1)-st parameter $G_b$ is calculated as follows:

$$\overline{A}_{1,1} = q_1$$
$$\overline{\alpha}_1 = \overline{A}_{1,1} - A_{1,2}$$
$$G_b = - \overline{\alpha}_1 C_1$$

Thus, we can calculate the parameters of our circuit from any given set of eigenvalues, except when:

$$\alpha_1, \ldots, \alpha_n; \beta_1, \ldots, \beta_{n-1}; \overline{\alpha}_1 = 0, \infty \qquad (11)$$

since in this case some of the parameters will be zero or will tend to infinity. Fortunately, the set S satisfying relations (11), has a zero Lebesque measure. Hence the circuit is canonical. ∎

*Remark*:

4) If the prescribed eigenvalue pattern belongs to S, we can perturb one of the $\mu$'s or $\nu$'s so that the qualitative behavior of the system does not change, thereby obtaining a realizable eigenvalue pattern.

Lemmas 1 and 3 and Theorem 1 give an efficient algorithm for calculating the circuit parameters from any prescribed set of eigenvalues, except for the set S. We will now illustrate this algorithm with the following examples.

*Example 1. Three-dimensional canonical Chua's circuit.*[3)]

Let $\mu_1$, $\mu_2$ , $\mu_3$ and $\nu_1$, $\nu_2$, $\nu_3$ be the eigenvalues of the 3-dimensional canonical circuit. Then, the circuit parameters can be determined by the following procedure:

Step one: From (5) we have:

$$p_1 = \mu_1 + \mu_2 + \mu_3 \ , \quad - p_2 = \mu_1\mu_2 + \mu_1\mu_3 + \mu_2\mu_3 \ , \quad p_3 = \mu_1\mu_2\mu_3$$
$$q_1 = \nu_1 + \nu_2 + \nu_3 \ , \quad - q_2 = \nu_1\nu_2 + \nu_1\nu_3 + \nu_2\nu_3 \ , \quad q_3 = \nu_1\nu_2\nu_3$$

Step two: From Lemma 1 we have:

$$A_{1,1} = p_1 , \quad A_{1,2} = - \frac{p_2 - q_2}{p_1 - q_1} , \quad A_{2,1} = -p_2 , \quad A_{2,2} = \frac{p_3 - q_3}{p_1 - q_1}$$

$$A_{3,1} = p_3 , \quad \overline{A}_{1,1} = q_1$$

Step three: From Lemma 3 we obtain:

1) $\alpha_1 = A_{1,1} - A_{1,2} , \quad \beta_1 = - A_{2,1} + A_{2,2} + \alpha_1 A_{1,2}$

$$A_{1,3} = \frac{-A_{3,1} + A_{3,2} + \alpha_1 A_{2,2}}{\beta_1}$$

2) $\alpha_2 = A_{1,2} - A_{1,3} , \quad \beta_2 = - A_{2,2} + A_{2,3} + \alpha_2 A_{1,3}$

3) $\alpha_3 = A_{1,3}$

4) $\overline{\alpha}_1 = \overline{A}_{1,1} - A_{1,2}$

Step four: From Theorem 1 we have:

$$C_1 = a , \quad G_a = -\alpha_1 C_1 , \quad G_b = - \overline{\alpha}_1 C_1$$

$$L_2 = -1/(\beta_1 C_1) , \quad R_2 = -\alpha_2 L_2 , \quad C_3 = -1/(\beta_2 L_2) , \quad G_3 = -\alpha_3 C_3$$

It is easily verified that these parameters are identical to those calculated using the explicit formulas in Ref.3.

*Example 2. Five-dimensional Chua's circuit.*

Let $\mu_1, \mu_2 , ..., \mu_5$ and $\nu_1, \nu_2, ..., \nu_5$ be the eigenvalues of the 5-dimensional canonical circuit (Fig. 2(c)). The circuit parameters are:

$$C_1 = a \quad G_a = -\alpha_1 C_1 , \quad G_b = - \overline{\alpha}_1 C_1 , \quad L_2 = -1/(\beta_1 C_1) , \quad R_2 = -\alpha_2 L_2$$

$$C_3 = -1/(\beta_2 L_2), \quad G_3 = -\alpha_3 C_3, \quad L_4 = -1/(\beta_3 C_3), \quad R_4 = -\alpha_4 L_4, \quad C_5 = -1/(\beta_4 L_4), \quad G_5 = -\alpha_5 C_5$$

where from Lemma 3 we have

1) $\alpha_1 = A_{1,1} - A_{1,2} , \quad \beta_1 = - A_{2,1} + A_{2,2} + \alpha_1 A_{1,2}$

$$A_{1,3} = \frac{-A_{3,1} + A_{3,2} + \alpha_1 A_{2,2}}{\beta_1}$$

$$A_{2,3} = \frac{-A_{4,1} + A_{4,2} + \alpha_1 A_{3,2}}{\beta_1}$$

$$A_{3,3} = \frac{-A_{5,1} + \alpha_1 A_{4,2}}{\beta_1}$$

2) $\alpha_2 = A_{1,2} - A_{1,3}$ , $\beta_2 = - A_{2,2} + A_{2,3} + \alpha_2 A_{1,3}$

$$A_{1,4} = \frac{-A_{3,2} + A_{3,3} + \alpha_2 A_{2,3}}{\beta_2}$$

$$A_{2,4} = \frac{-A_{4,2} + \alpha_2 A_{3,3}}{\beta_2}$$

3) $\alpha_3 = A_{1,3} - A_{1,4}$ , $\beta_3 = - A_{2,3} + A_{2,4} + \alpha_3 A_{1,4}$

$A_{1,5} = (-A_{3,3} + \alpha_3 A_{2,4})/\beta_3$

4) $\alpha_4 = A_{1,4} - A_{1,5}$ $\beta_3 = - A_{2,4} + \alpha_4 A_{1,5}$

5) $\alpha_5 = A_{1,5}$

6) $\overline{\alpha}_1 = \overline{A}_{1,1} - A_{1,2}$

From Lemma 1 we obtain:

$$A_{1,1} = p_1 \quad A_{1,2} = - \frac{p_2 - q_2}{p_1 - q_1} \quad A_{2,1} = -p_2 \quad A_{2,2} = \frac{p_3 - q_3}{p_1 - q_1}$$

$$A_{3,1} = p_3 \quad A_{3,2} = - \frac{p_4 - q_4}{p_1 - q_1} \quad A_{4,1} = -p_4 \quad A_{4,2} = \frac{p_5 - q_5}{p_1 - q_1}$$

$$A_{5,1} = p_5 \quad \overline{A}_{1,1} = q_1$$

where $p_i$ and $q_i$ are obtained from (5).

*Remark*:

5) For $n > 5$, a computer program is available for calculating the circuit parameters.

## IV. SOME PROPERTIES OF THE CANONICAL CIRCUIT

In this section we generalize Theorem 1[3] as follows:

**THEOREM 2:**

(i) The following conditions are equivalent:

i.1) The vector field in $\mathbb{L}(n,2)$ has two equilibrium points;

i.2) The canonical circuit has two dc operating points;

i.3) $G_a < -G_e < G_b$ or $G_a > -G_e > G_b$;

i.4) $p_n / q_n < 0$

(ii) The following conditions are equivalent:

i.1) The vector field in $\mathbb{C}(n,3)$ has three equilibrium points;

i.2) The canonical circuit has three dc operating points;

i.3) $G_a < -G_e < G_b$ or $G_a > -G_e > G_b$;

i.4) $p_n / q_n < 0$

where $G_e$ is defined by the continued fraction:

$$G_e = \cfrac{1}{R_2 + \cfrac{1}{G_3 + \cfrac{1}{R_4 + \cdots\cdots + \cfrac{1}{G_{n-1} + \cfrac{1}{R_n}}}}} \tag{12}$$

*Proof of Theorem 2.*

(i)

1) The equilibrium points of our canonical circuit can be obtained from state equation (4) when $\frac{dX}{dt} = 0$, that is:

$$\mathbf{B}\,\mathbf{X} + \sum_{i=1}^{2} C_i \,|\langle \alpha_i, X\rangle - \beta_i| = \mathbf{0} \tag{13a}$$

or

$$\begin{aligned} & -i_{G_1}(v_{C_1}) + i_{L_2} = 0 \\ & v_{C_{i-1}} + R_i i_{L_i} - v_{C_{i+1}} = 0 \qquad i = 2, 4, 6, \ldots \\ & -i_{L_{i-1}} - G_i v_{C_i} + i_{L_{i+1}} = 0 \qquad i = 3, 5, 7, \ldots \\ & v_{C_{n-1}} + R_n i_{L_n} = 0 \end{aligned} \tag{13b}$$

In Fig.3. we show the circuit which is obtained from the canonical circuit (Fig.2(d)) with the capacitors open-circuited and the inductors short-circuited. In fact, the equations (13b) are the KCL and KVL equations of the resistive circuit shown in Fig.3. Solving these equations we obtain the dc operating points of the circuit, which means that the equilibrium points and the dc operating points are identical. Hence, the conditions i.1) and i.2) are equivalent.

2) Equation (13a) in region $D_0$ becomes:

$$M_0 X = \mathbf{0}$$

So, when det $M_0 \neq 0$ the canonical circuit has one and only one equilibrium point in the $D_0$ region ($X = \mathbf{0}$). Hence, if the circuit has two equilibrium points, one of them must be located in the $D_1$ region. The converse is also true. This also means that the circuit will have only one dc operating point at the origin, and one in the $D_1$ region (see Fig.4).

Segment B in Fig.4 is described by:

$$i = G_b v + (G_a - G_b) \tag{14}$$

while the load line is defined by:

$$i = -G_e v \tag{15}$$

where $G_e$ is given by (12).

The intersection points of (14) and (15) have the following coordinates:

$$v_O = \frac{G_b - G_a}{G_b + G_e} \quad \text{and} \quad i_0 = -G_e v_0$$

Since the circuit in the region $D_1$ has an equilibrium point if and only if $v_O > 1$, we have:

$$\frac{G_a + G_e}{G_b + G_e} < 0$$

which is equivalent to:

$$G_a < -G_e < G_b \quad \text{or} \quad G_a > -G_e > G_b$$

Thus, the conditions i.2) and i.3) are equivalent.

3) Since

$$p_n = (-1)^{n-1} \det M_0 \quad \text{and} \quad q_n = (-1)^{n-1} \det M_1$$

and expressing $\det M_m$ (m =0, 1) as:

$$(-1)^{n-1} \det M_m \cdot (C_1 L_2 \cdots C_{n-1} L_n) = \prod_{k=1}^{n} a_k + \sum_{s_1=1}^{n-1} \prod_{k \neq s_1, s_1+1} a_k +$$

$$+ \sum_{\substack{s_1=1,\ldots,n-3 \\ s_2=3,\ldots,n-1}} \prod_{k \neq s_1, s_1+1, s_2, s_2+1} a_k + \cdots + \sum_{\substack{s_1=1,\ldots,n-2i+1 \\ s_2=1,\ldots,n-2i+3 \\ \cdots \\ s_i=2i-1,\ldots,n-1}} \prod_{\substack{k \neq s_j, s_j+1 \\ j=1,\ldots,i}} a_k + \cdots + \sum_{k=1}^{n} a_k$$

where $a_k = G_k$, for k odd (k > 1), $a_k = R_k$ for k even, and $a_1 = G_a$ if m = 0, while $a_1 = G_b$ if m = 1, we can show by mathematical induction that:

$$\frac{G_a + G_e}{G_b + G_e} = \frac{p_n}{q_n}$$

Hence, the conditions i.3) and i.4) are equivalent.

(ii) The proof is similar.∎

## V. CONCLUSION

In this paper we have presented an n-dimensional three-region canonical circuit. It contains 2n elements and realizes any eigenvalue pattern (except for a measure zero set) associated with (i) any n-dimensional two-region continuous piecewise-linear vector fields and (ii) any n-dimensional three-region symmetric (with respect to the origin) piecewise-linear continuous vector fields.

We remark that there are two reasons for choosing a k-segment piecewise-linear v-i characteristic:

$$i = a_0 + a_1 v + \sum_{j=1}^{k-1} b_j \, |v - E_j|$$

for Chua's diode. *First*, any such characteristic can be *exactly* synthesized and built in practice by using only op AMPs, pn - junction diodes and batteries, by several methods[10,11]. *Second*, the dynamics of piecewise-linear circuits can be analyzed, at least at an intuitive level, using standard linear system theory, and there is hope that even a rigorous proof of chaos may be achieved for certain parameter values, as Reference 5.

We close our paper with the following directions for further studies:

(i) To find an n-dimensional canonical k-regional piecewise- linear circuit. This is of particular importance since any nonlinear v-i characteristic can be described with an k-region piecewise-linear continuous characteristic;

(ii) To investigate new phenomena in the n-dimensional canonical k-regional piecewise-linear circuit, especially when n tends to infinity. This is also important in order to understand the dynamic of high- and infinite-dimensional systems.

*Appendix A.*

(i) This is obvious from (6).

(ii) From (6) and (7) we have:

$$p_1 - q_1 = \sum_{s_1=1}^{n} a_{s_1,s_1} - \sum_{s_1=1}^{n} \bar{a}_{s_1,s_1} = a_{1,1} - \bar{a}_{1,1}$$

$(-1)^m (p_{m+1} - q_{m+1}) =$

$$= \sum_{s_1=1}^{n-m} \sum_{s_2>s_1}^{n-m+1} \cdots \sum_{s_{m+1}>s_m}^{n} \begin{vmatrix} a_{s_1,s_1} & a_{s_1,s_2} & \cdots & a_{s_1,s_{m+1}} \\ a_{s_2,s_1} & a_{s_2,s_2} & \cdots & a_{s_2,s_{m+1}} \\ \vdots & \vdots & \ddots & \vdots \\ a_{s_{m+1},s_1} & a_{s_{m+1},s_2} & \cdots & a_{s_{m+1},s_{m+1}} \end{vmatrix} -$$

$$- \sum_{s_1=1}^{n-m} \sum_{s_2>s_1}^{n-m+1} \cdots \sum_{s_{m+1}>s_m}^{n} \begin{vmatrix} \bar{a}_{s_1,s_1} & a_{s_1,s_2} & \cdots & a_{s_1,s_{m+1}} \\ a_{s_2,s_1} & a_{s_2,s_2} & \cdots & a_{s_2,s_{m+1}} \\ \vdots & \vdots & \ddots & \vdots \\ a_{s_{m+1},s_1} & a_{s_{m+1},s_2} & \cdots & a_{s_{m+1},s_{m+1}} \end{vmatrix} =$$

$=(p_1 - q_1)\, A_{m,2}.$

Thus: $$A_{m,2} = (-1)^m \frac{(p_{m+1} - q_{m+1})}{(p_1 - q_1)} . \blacksquare$$

*Appendix B.*

We shall prove only the relation (10a). The other relations can be proved in a similar way. Since $a_{l+k,l} = 0$ for k> 1, we have

$$A_{m,l} = \sum_{s_1=l}^{n-m+1} \sum_{s_2>s_1}^{n-m+2} \cdots \sum_{s_m>s_{m-1}}^{n} \begin{vmatrix} a_{s_1,s_1} & a_{s_1,s_2} & \cdots & a_{s_1,s_m} \\ a_{s_2,s_1} & a_{s_2,s_2} & \cdots & a_{s_2,s_m} \\ \vdots & \vdots & \ddots & \vdots \\ a_{s_m,s_1} & a_{s_m,s_2} & \cdots & a_{s_m,s_m} \end{vmatrix} =$$

$$= a_{l,l} \sum_{s_2=l+1}^{n-m+2} \sum_{s_3>s_2}^{n-m+3} \cdots \sum_{s_m>s_{m-1}}^{n} \begin{vmatrix} a_{s_2,s_2} & a_{s_2,s_3} & \cdots & a_{s_2,s_m} \\ a_{s_3,s_2} & a_{s_3,s_3} & \cdots & a_{s_3,s_m} \\ \vdots & \vdots & \ddots & \vdots \\ a_{s_m,s_2} & a_{s_m,s_3} & \cdots & a_{s_m,s_m} \end{vmatrix} -$$

$$- a_{l+1,l} \sum_{s_3=l+2}^{n-m+3} \sum_{s_4>s_3}^{n-m+4} \cdots \sum_{s_m>s_{m-1}}^{n} \begin{vmatrix} a_{l,l+1} & 0 & \cdots & 0 \\ a_{s_3,l+1} & a_{s_3,s_3} & \cdots & a_{s_3,s_m} \\ \vdots & \vdots & \ddots & \vdots \\ 0 & a_{s_m,s_3} & \cdots & a_{s_m,s_m} \end{vmatrix} +$$

$$+ \sum_{s_1=l+1}^{n-m+1} \sum_{s_2>s_1}^{n-m+2} \cdots \sum_{s_m>s_{m-1}}^{n} \begin{vmatrix} a_{s_1,s_1} & a_{s_1,s_2} & \cdots & a_{s_1,s_m} \\ a_{s_2,s_1} & a_{s_2,s_2} & \cdots & a_{s_2,s_m} \\ \vdots & \vdots & \ddots & \vdots \\ a_{s_m,s_1} & a_{s_m,s_2} & \cdots & a_{s_m,s_m} \end{vmatrix} =$$

$$= a_{l,l} A_{m-1,l+1} -$$

$$- a_{l+1,l} a_{l,l+1} \sum_{s_3=l+2}^{n-m+3} \sum_{s_4>s_3}^{n-m+4} \cdots \sum_{s_m>s_{m-1}}^{n} \begin{vmatrix} a_{s_3,s_3} & a_{s_3,s_4} & \cdots & a_{s_3,s_m} \\ a_{s_4,s_3} & a_{s_4,s_4} & \cdots & a_{s_4,s_m} \\ & \vdots & \ddots & \vdots \\ a_{s_m,s_3} & a_{s_m,s_4} & \cdots & a_{s_m,s_m} \end{vmatrix} +$$

$$+ A_{m,l+1} = \alpha_l A_{m-1,l+1} - \beta_l A_{m-2,l+2} + A_{m,l+1}.$$

The lemma is proved.∎

*Appendix C.*

Step One ($l$ = 1):

Using (8a), (9a), (10a) and (10b), we obtain:

$$\alpha_1 = A_{1,1} - A_{1,2}$$

$$\beta_1 = - A_{2,1} + A_{2,2} + \alpha_1 A_{1,2}$$

$$A_{j,3} = (- A_{j+2,1} + A_{j+2,2} + \alpha_1 A_{j+1,2}) / \beta_1$$

$j=1,2,\ldots,n-3$

$$A_{n-2,3} = (-A_{n,1} + \alpha_1 A_{n-1,2}) / \beta_1$$

Note that $A_{i,3}$ are obtained in this step, i = 1, 2, ... n-3; they will be used in the following steps.

Step Two ($l$ = 2):

From (8a), (9a), (10a) and (10b), we get:

$$\alpha_2 = A_{1,2} - A_{1,3}$$

$$\beta_2 = - A_{2,2} + A_{2,3} + \alpha_2 A_{1,3}$$

$$A_{j,4} = (- A_{j+2,2} + A_{j+2,3} + \alpha_2 A_{j+1,3}) / \beta_2$$

$j=1,2,\ldots,n-4$

$$A_{n-3,4} = (-A_{n-1,1} + \alpha_2 A_{n-2,3}) / \beta_2$$

Step k ($l$ = k, k = 3, ..., n-3):

Using (8a), (9a), (10a) and (10b), we obtain:

$$\alpha_k = A_{1,k} - A_{1,k+1}$$

$$\beta_k = - A_{2,k} + A_{k,k+1} + \alpha_k A_{1,k+1}$$

$$A_{j,k+2} = (- A_{j+2,k} + A_{j+2,k+1} + \alpha_k A_{j+1,k+1}) / \beta_k$$

$j=1,2,\ldots,n-k-2$

$$A_{n-k-1,k+2} = (-A_{n-k+1,k} + \alpha_k A_{n-k,k+1}) / \beta_k$$

Similarly, we determine $A_{j,k+2}$ in this step, since they are needed in the subsequent steps.

Step n-2 ($l$ = n-2):

Using (8a), (9a) and (10b), we obtain

$$\alpha_{n-2} = A_{1,n-2} - A_{1,n-1}$$

$$\beta_{n-2} = - A_{2,n-2} + A_{2,n-1} + \alpha_{n-2} A_{1,n-1}$$

$$A_{1,n} = (- A_{3,n-2} + \alpha_{n-2} A_{2,n-1} ) / \beta_{n-2}$$

Step n-1 ($l$ = n-1):

From (8a) and (9b) we have:

$$\alpha_{n-1} = A_{1,n-1} - A_{1,n}$$

$$\beta_{n-1} = - A_{2,n-1} + \alpha_{n-1} A_{1,n}$$

Step n ($l$ = n):

Finally, we use (8b):

$$\alpha_n = A_{1,n}$$

This completes the proof.∎

References:


1. T.Matsumoto, "A Chaotic Attractor from Chua's Circuit", *IEEE Transactions on Circuit and Systems*, vol.31 (1984) 1055-1058.

2. L. O. Chua, "The Genesis of Chua's Circuit", *Archiv fur Elektronik und Ubertragungstechnik*, Special Issue on Nonlinear Networks and Systems, vol.46 no.4 (1992) 250-257.

3. L. O. Chua and G. N. Lin, "Canonical Realization of Chua's Circuit Family", *IEEE Transactions on Circuit and Systems*, vol.37 (1990) 885-902.

4. M.P.Kennedy, "Robust op amp Realization of Chua's Circuit", *Frequenz*, vol.46 (1992) 66-80.

5. L. O. Chua, M.Komuro and T.Matsumoto, "The Double Scroll Family", *IEEE Transactions on Circuit and Systems*, vol.33 (1986) 1073-1118.

6. C.P.Silva and L. O. Chua, "The Overdamped Double Scroll Family", *Inter. J.Circuit Theory Appl.*, vol.16 (1988) 233-302.

7. Lj.Kocarev, Lj.Karadzinov, Z.Tasev and P.Janjic, "New Canonical Realization of Chua's Circuit Family", *Proceedings of XXXV-th Conference of Electronics, Telecommunications, Automation and Nuclear Engineering - ETAN*, vol.35 part 3-4 (1991) 75-82.

8. Lj.Kocarev, Lj.Karadzinov and A-S Huang, "All Three-Dimensional Canonical Chua's Circuit", in preparation

9. L. O. Chua and A.-C.Deng, "Canonical Piecewise-Linear Representation", *IEEE Transactions on Circuit and Systems*, vol.35 (1988) 101-111.

10. L.O.Chua and S.Wong, "Synthesis of piecewise - linear networks", *Electronic Circuit and Systems*, vol.2, no.4 (1978) 102-108.

11. L.O.Chua and E.S.Kuh, *Linear and Nonlinear Circuits*, McGraw Hill, New York, N.Y. 1987.

Figure captions:

Fig.1.a) The v-i characteristic of the two-segment Chua's diode ($G_a \neq G_b$)

b) The v-i characteristic of the three-segment Chua's diode ($G_a \neq G_b$)

Fig.2. a) 3-dimensional canonical Chua's circuit

b) 4-dimensional canonical Chua's circuit

c) 5-dimensional canonical Chua's circuit

d) n-dimensional canonical Chua's circuit (for n even)

e) n-dimensional canonical Chua's circuit (for n odd)

Fig.3. The dc circuit

Fig.4 The dc operating points

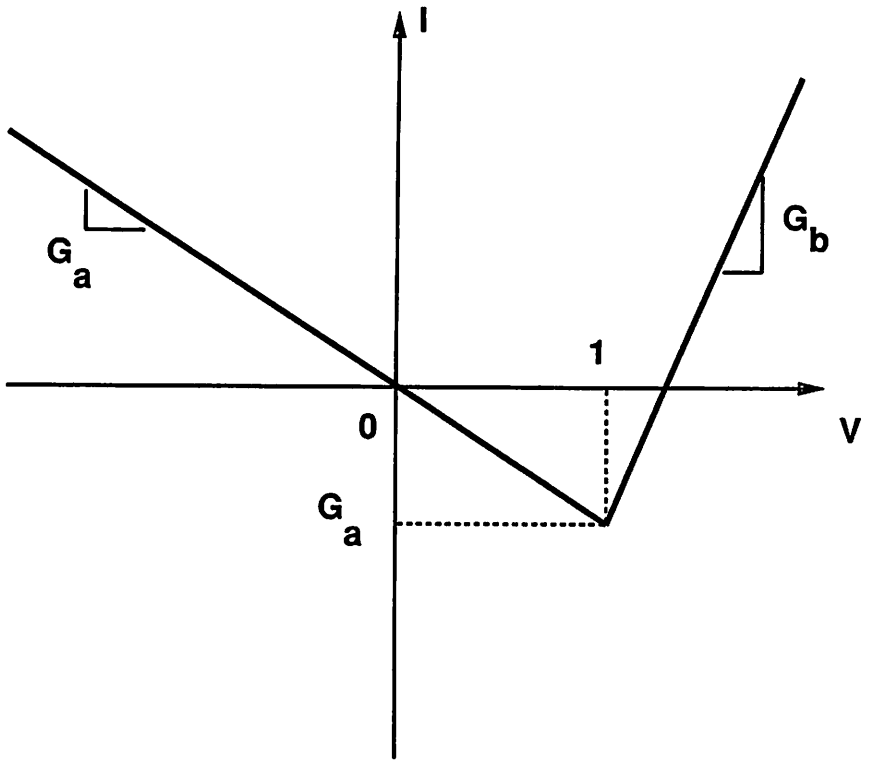


a)

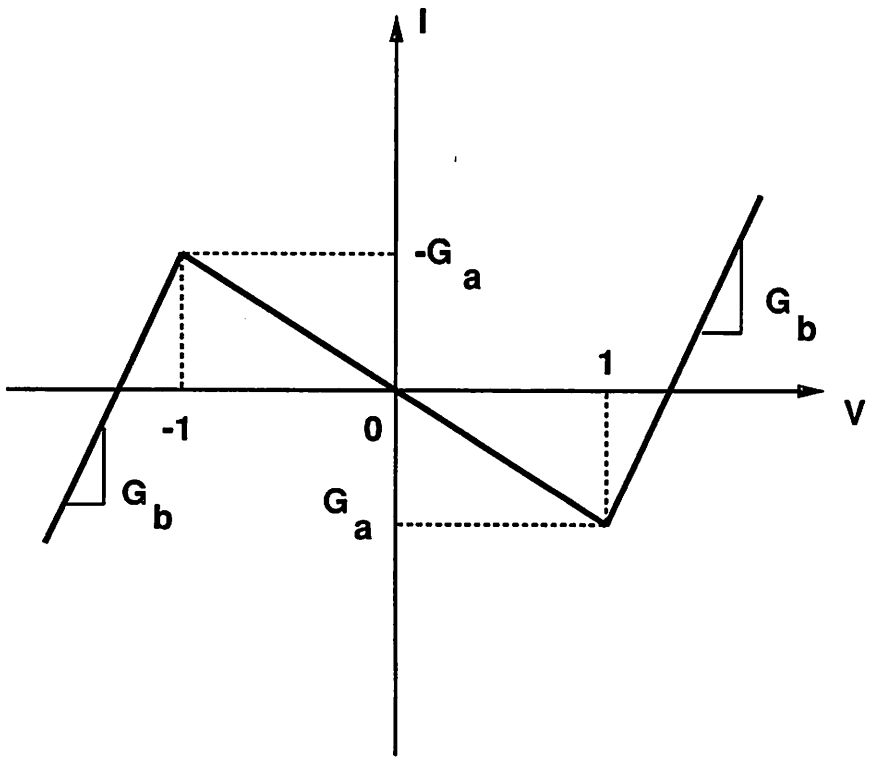


b)

Figure 1

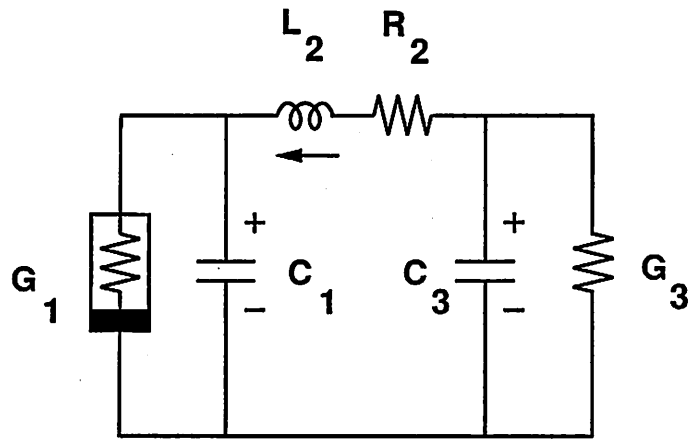


Figure 2a

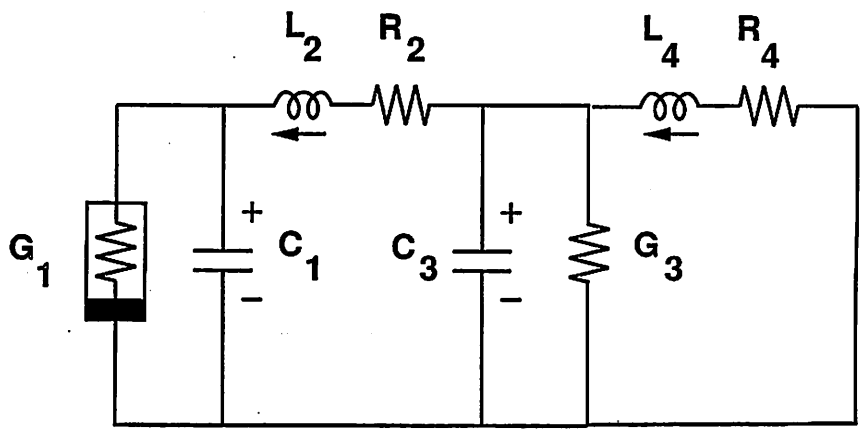


Figure 2b

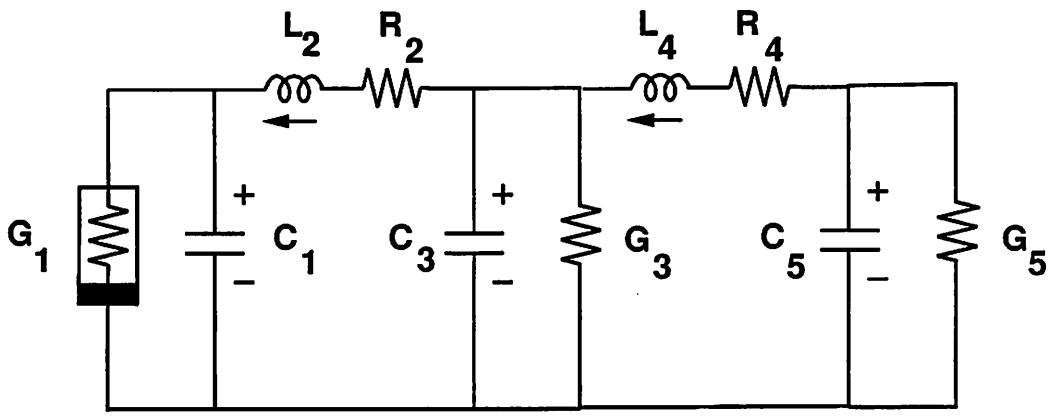


Figure 2c

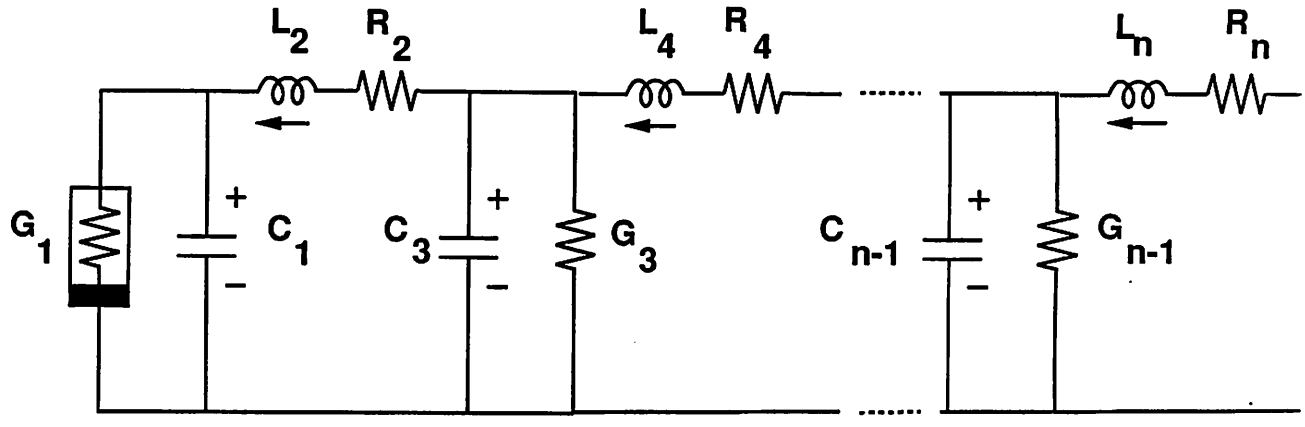


Figure 2d

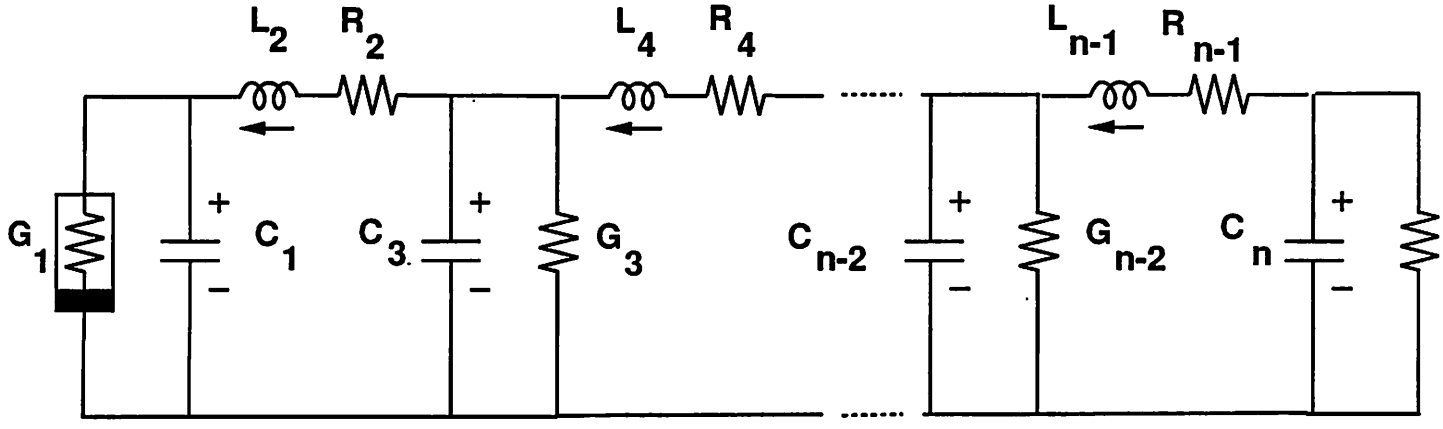


Figure 2e

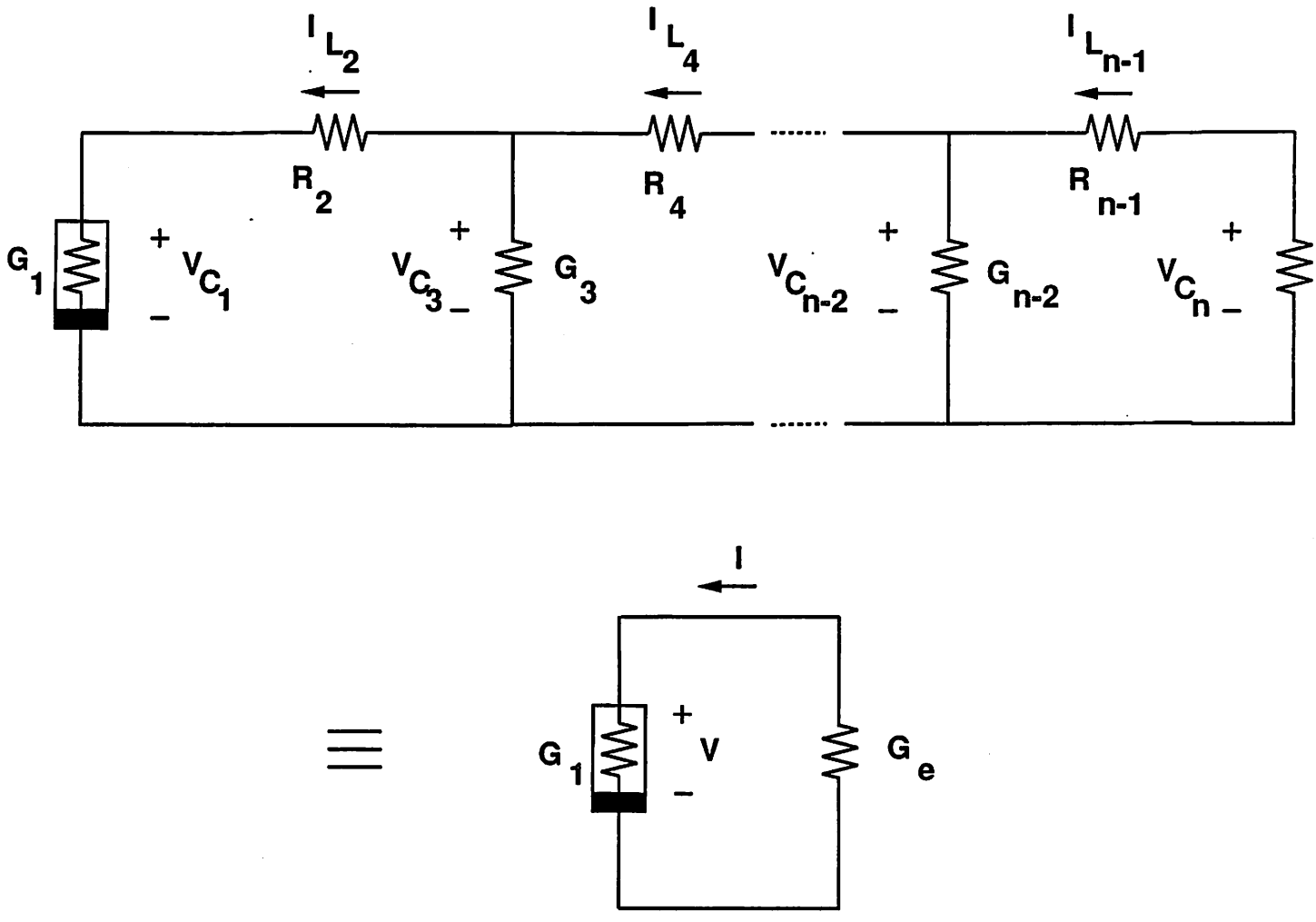


Figure 3

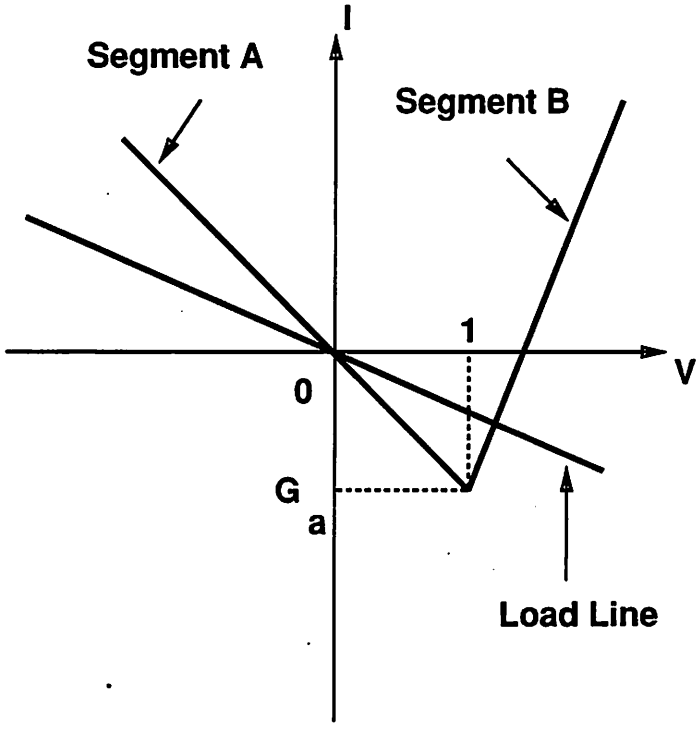


Figure 4